atmosphere is everything
14716 S. BROADWAY, GARDENA, CA 90248 ● Ph: (310)532-1555 Fax: (310)-532-3030 ● www.marsair.com
© Copyright Mars Air Systems, LLC 2014

PH12 Unheated Series

Phantom 12 Series
Commercial Air Curtain
Submittal Package

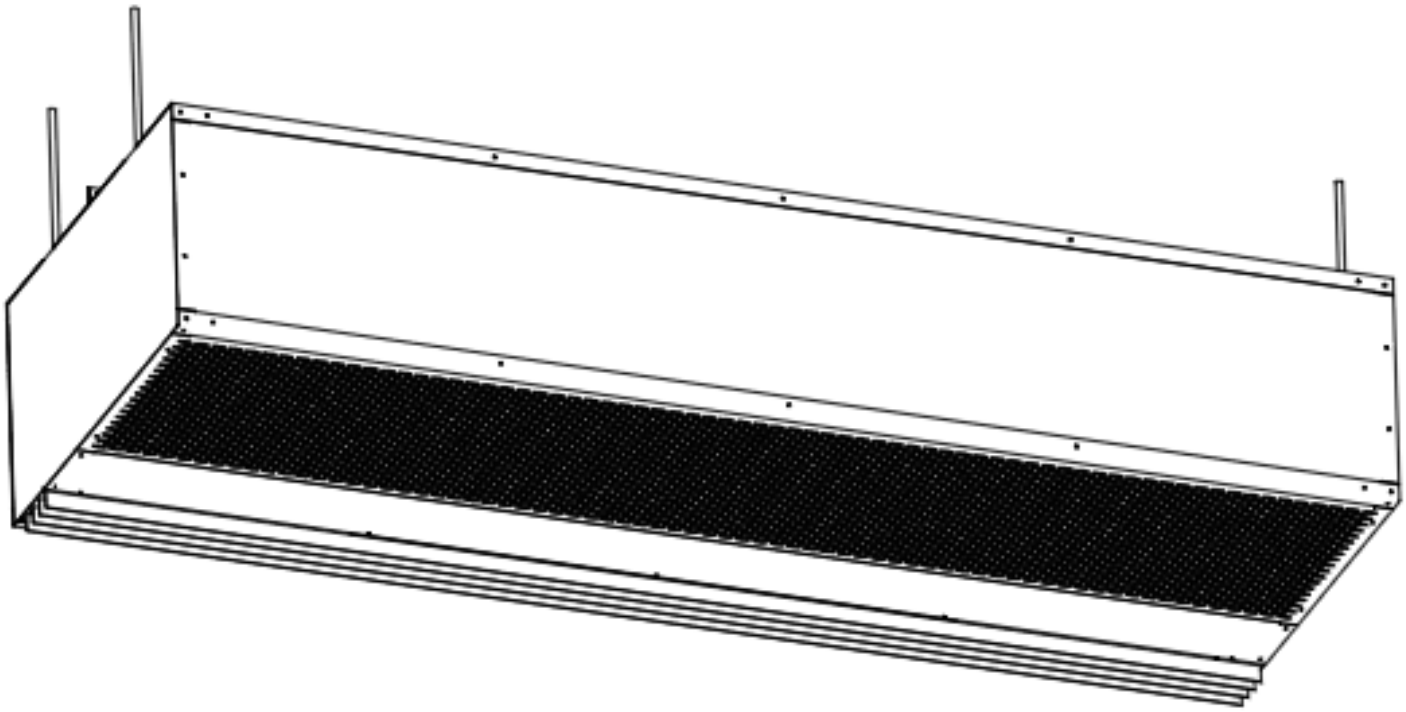

Submitted by:

Mars Air Systems, LLC
14716 S. Broadway
Gardena, CA 90248

P.O.#	
S.Q.	
Company	
Print Name	
Signature	
Date	

(Electronic Signature Preferred)

Company Seal or Stamp

NOTE: MARS AIR SYSTEMS, LLC reserves the right to change specifications and product design without notice. Such revisions do not entitle the buyer to corresponding changes, improvements, additions, or replacements for previously purchased equipment.

atmosphere is everything
14716 S. BROADWAY, GARDENA, CA 90248 ● Ph: (310)532-1555 Fax: (310)-532-3030 ● www.marsair.com
© Copyright Mars Air Systems, LLC 2014

Table of Contents

Page #	Content
3-4	**PH12 Unheated Submittals**
5	**Typical Motor Control Panel Wiring Diagram**
6-7	**Accessory Installation Supplement**
8-11	**Installation, Operation and Maintenance**
12-13	**Troubleshooting Guide**
14	**Warranty**
15-25	**CSI Spec**
26	**Reference Links**

NOTE: MARS AIR SYSTEMS, LLC reserves the right to change specifications and product design without notice. Such revisions do not entitle the buyer to corresponding changes, improvements, additions, or replacements for previously purchased equipment.

atmosphere is everything
14716 S. Broadway • Gardena, CA 90248 • USA
TEL:(310) 532-1555 • (800) 421-1266 • FAX:(310) 324-3030
Web Site: www.marsair.com • E-mail:info@marsair.com

PROJECT		OPTIONS/ITEMS	
TITLE			
COMMENTS		DATE 9/12/14	PAGE
		REV. NO	
MODEL NO. PH12 Series	DRAWING NO PH12U–F	DRAWN BY TVN	CHECKED BY	FILE NAME

Unheated Drawing

PH12
(Phantom 12)
Series

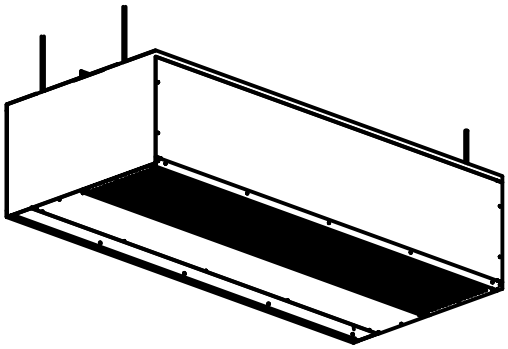

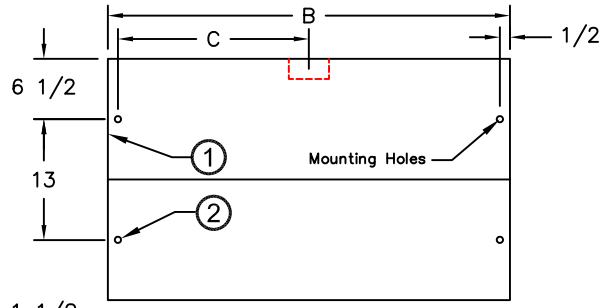

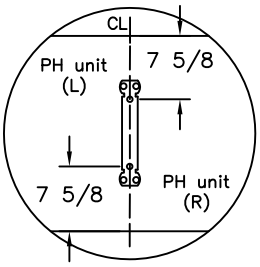

For tandem mounted units, center support required. The (2) center mounting holes are centerline of unit and 7 5/8" from front and rear of unit.

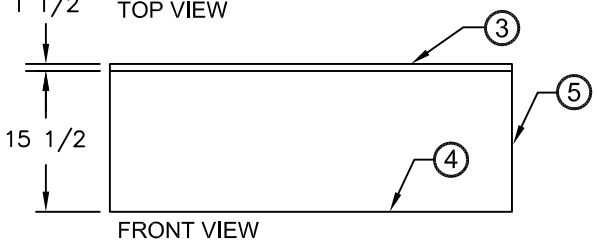

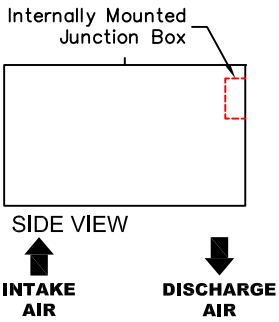

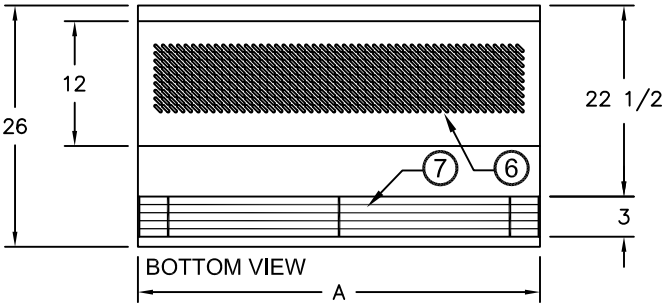

Intertek

Note: Models PH1260-1 & PH12120-2 are not AMCA Certified.

9 Recommended Accessories

Door Limit Switches

Control Panels

*- Use corresponding letters in "Electrical Data" columns to complete the model numbers.

MODEL NUMBER	NOZZLE WIDTH A (in)	OVERALL LENGTH B (in)	JUNCTION BOX LOCATION C (in)
PH1242-1U*-PW	42	42 1/8	21**
PH1248-1U*-PW	48	48 1/8	24**
PH1260-1U*-PW	60	60 1/8	30**
PH1272-2U*-PW	72	72 1/8	36**
PH1284-2U*-PW	84	84 1/4	42**
PH1296-2U*-PW	96	96 1/4	24**
PH12120-2U*-PW	120	120 1/4	30**
PH12144-4U*-PW	144	144 1/4	36**

** - Measurements from edge of each unit, when tandem mounted.

Notes:

1. This product is designed to meet the National Electric Code (NEC) and is ETL Listed for the US and Canada, AMCA Certified and bear the CE mark.
2. (4) 3/8" threaded rod required for overhead installation.
3. Cabinet has sufficient strength for fastening to wall on both ends without intermediate support.
4. Four(4) 1" x 1" pearl white trim pieces included to match air curtains and ceilings. (Does not increase unite size)
5. Tandem mounted units longer than 72" require center support.
6. Cleanable polyester filters included as standard. Optional aluminum or throwaway pleated filters available.
7. Unit is to be installed such that air flow is unobstructed. Air discharge nozzle containing adjustable air directional vanes with 40° sweep front to back.
8. Circuit protection as per NEC by others.
9. Optional motor control panel, door limit switch and mounting brackets are field installed and/or wired by others. The door limit switch is to be mounted such that the air curtain turns on as door begins to open. To prevent unit damage, the mounting brackets must be installed such that the bottom of the air curtain is not below the door header.

PH12 (Phantom 12) Series

Unheated

Model Lengths 42” – 144”

atmosphere is everything

14716 S. BROADWAY, GARDENA, CA 90248 ● Ph: (310)532-1555 Fax: (310)-532-3030 ● www.marsair.com
© Copyright Mars Air Systems, LLC 2014

Unheated Data Sheet

Applications: Environmental Separation: Max Height 16’ / Insect Control: Max Height 14’

PH12 (Phantom 12)	Mechanical Data						AMCA Certified Lab Data				
Model Number	Nozzle Length (in)	Length (in)	Depth (in)	Height (in)	Motor (hp)	Weight (lbs)	Max Core Velocity at Nozzle (fpm)	Avg Velocity (fpm)	Volume (cfm)	Uniformity (%)	Power Rating (watts)
PH1242-1U*-PW	42	42	26	17	1	90	6300	2824	2471	90	1260
PH1248-1U*-PW	48	48	26	17	1	90	6450	2534	2534	89	1345
PH1260-1U*-PW	60	60	26	17	1	95	6866	2207	2759	86	1535
PH1272-2U*-PW	72	72	26	17	Two 1	155	6050	3097	4646	93	2316
PH1284-2U*-PW	84	84	26	17	Two 1	175	6300	2824	4942	90	2520
PH1296-2U*-PW	96	96	26	17	Two 1	180	6300	2534	5068	89	2690
PH12120-2U*-PW	120	120	26	17	Two 1	270	6866	2207	5518	86	3070
PH12144-4U*-PW	144	144	26	17	Four 1	310	6050	3097	9292	93	4632

* - Use corresponding letters in "Electrical Data" columns to complete the model numbers.

Note: Data above for 1725 RPM at 60 Hz, 50 Hz is 1425 RPM with a 17% reduction in the performance data.

1. The AMCA Certified Ratings Seal applies to airflow rate, average outlet velocity, outlet velocity uniformity, velocity projection and power rating at free delivery only.
2. Rated data shown are only for base (unheated) units, as shown.

Features:

- 1 HP Continuous Duty TEAO Motors
- Recessed mounted in ceiling for invisible coverage
- AMCA Certified to AMCA 211 Standards (see table above for models available)
- ETL Certified to conform to UL 507 (US) and CSA 22.2 (Canada) Standards (Indoor/Outdoor Use)
- Utilized in premium design concepts
- Durable aluminum construction
- Cabinet has sufficient strength for fastening to wall on both ends without intermediate support. (Tandem mounted units longer than 72” require center support)
- Cleanable polyester filters included as standard
- Adjustable air directional vanes with 40° sweep front to back
- Standard color is Pearl White
- Rust preventative electrostatic polyurethane powder coating
- 5-year parts warranty
- Freight Included (FOB Continental USA)
- Proudly Made in the USA

Electrical Data (FLA)	Unit Voltage (Voltage Code)				
	115v/1Ø (A)	208-230v/1Ø (D)	208-230v/3Ø (G)	460v/3Ø (H)	575v/3Ø (I)
PH1242-1U*-PW	9.0	5.0	3.3/3.2	1.6	1.3
PH1248-1U*-PW	9.0	5.0	3.3/3.2	1.6	1.3
PH1260-1U*-PW	9.0	5.0	3.3/3.2	1.6	1.3
PH1272-2U*-PW	18.0	10.0	6.6/6.4	3.2	2.6
PH1284-2U*-PW	18.0	10.0	6.6/6.4	3.2	2.6
PH1296-2U*-PW	18.0	10.0	6.6/6.4	3.2	2.6
PH12120-2U*-PW	18.0	10.0	6.6/6.4	3.2	2.6
PH12144-4U*-PW	36.0	20.0	13.2/12.8	6.4	5.2

* - Use corresponding letters in"Electrical Data" columns to complete the model numbers.

Alternate voltage codes with FLA (Full Load Amp) data:

277v/1Ø/60Hz (L) - 5.2A per motor

380-415v/3Ø/50Hz (W) - 1.8A per motor

220v/1Ø/50Hz (U) - 7.1A per motor

For total FLA, multiply motor FLA by # of motors.

Ampacity (MCA) = total FLA X 1.25

Mars Recommended Accessories (See Submittals for additional details):

- Door Limit Switches
  - 99-014, Combination mechanical switch, 250v, 1HP Max
  - 99-125, Industrial surface mounted magnetic switch (controller required)
- Controllers
  - MCPB-†U*, Motor Control Panel, 120V control voltage († = # of Motors, * = Voltage Code)
    - MCP-TD, Adjustable time delay, 1sec-100hr (panel required)
    - MCP-24V, Low voltage control option (panel required)
    - BMS-303, BMS for monitor and control (panel required with MCP-24V)
    - Note: Dry contact provided in panel for monitoring motor. 24Vac signal provided from panel for controlling motor
  - SK-URV, SimpleLink, 115V-575V, 4Mtr (1.5HP max @115V), Integral Control, Remote VFD for 3Ø, Nema1
- Severe Duty and Finish
  - HSG-304SS-PH, 304 Stainless steel housing construction

EXAMPLE

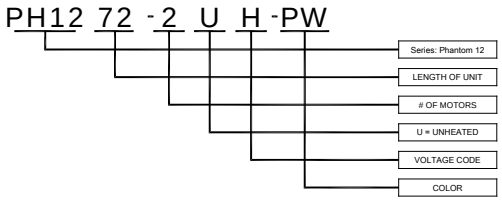

Sound Levels: (measured at 10’ in an open field)

1 Motor Unit = 70 dBA, 2 Motor Unit = 73 dBA, 3 & 4 Motor Unit = 75 dBA

Projection Velocity		
Model	Distance from nozzel (in)	Avg. Core Velocity (FPM)
PH1236-1U*	40	2039
	80	1217
	120	1122
	160	1033
	200	983

MARS Air Systems, LLC certifies that the Air Curtains shown on this data sheet are licensed to bear the AMCA seal. The ratings shown are based on tests and procedures performed in accordance with AMCA Publication 211 and comply with the requirements of the AMCA Certified Ratings Program.

The AMCA Certified Ratings Seal applies to airflow rate, average outlet velocity, outlet velocity uniformity, velocity projection and power rating at free delivery only.

Note: Models PH1260-1 & PH12120-2 are not AMCA Certified.

NOTE: MARS AIR SYSTEMS, LLC reserves the right to change specifications and product design without notice. Such revisions do not entitle the buyer to corresponding changes, improvements, additions, or replacements for previously purchased equipment.

atmosphere is everything
14716 S. Broadway • Gardena, CA 90248 • USA
TEL:(310) 532-1555 • (800) 421-1266 • FAX:(310) 324-3030
Web Site: www.marsair.com • E-mail:info@marsair.com

PROJECT			OPTIONS/ITEMS
TITLE			
COMMENTS		DATE 6/6/16	PAGE
		REV. NO 1	
MODEL NO. Series 2	DRAWING NO TYPICAL UNHEATED	DRAWN BY BH	CHECKED BY / FILE NAME

TYPICAL UNHEATED DIAGRAMS

SINGLE PHASE

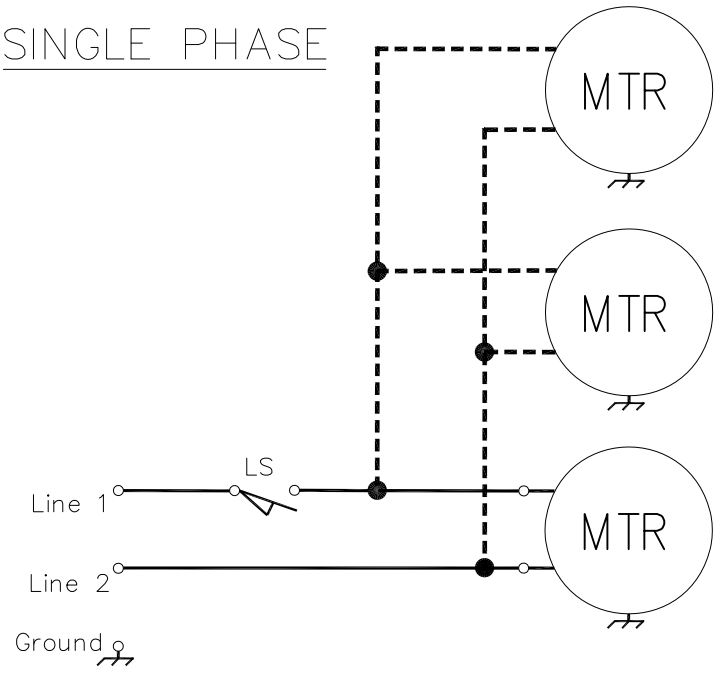

120/208–240v Single Phase Motor

1/2 H.P. Use 15A Micro Switch
1 H.P. Use 20A Micro Switch

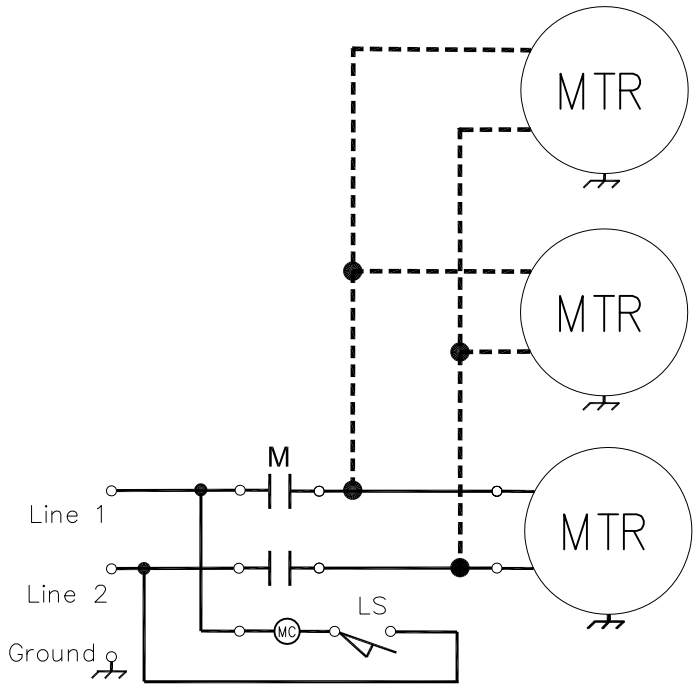

120/208–240v Single Phase Motor

Larger than 1 H.P. Use Contactor and 15A Micro Switch

THREE PHASE

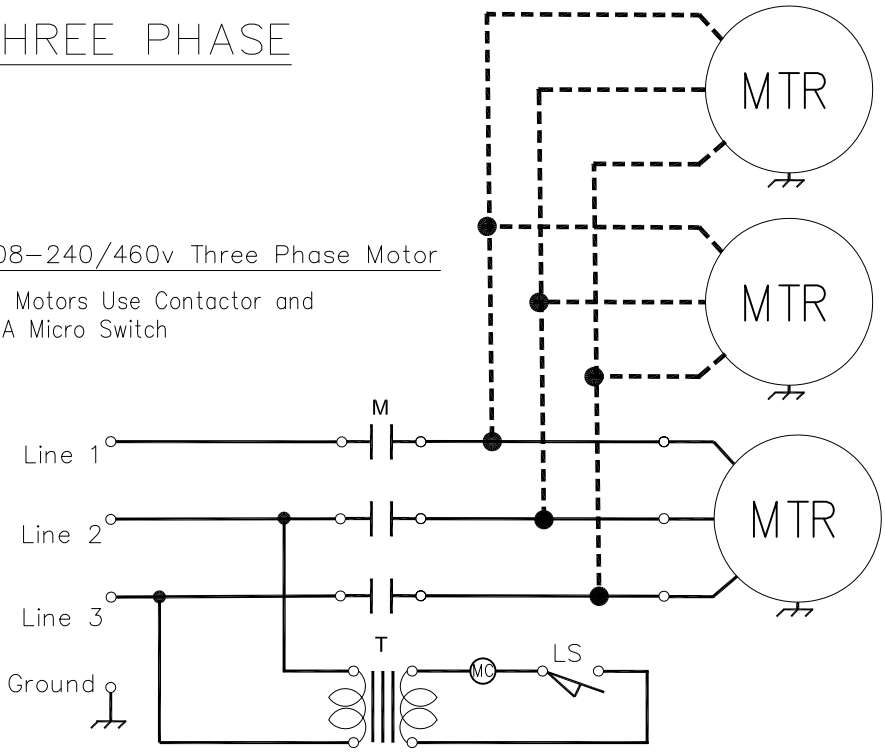

208–240/460v Three Phase Motor

All Motors Use Contactor and 15A Micro Switch

Note: This wiring diagram is applicable for:
Single Phase motors as follows–
LPV2: Up to 3 motors
STD2: Up to 2 motors
HV2: 1 motor

See *Door Limit Switch submittal for additional switch info

SYMBOLS

LS – Micro Switch
M – Contactor or Motor Starter
MC – Contactor Coil
T – Control Transformer

TYPICAL UNHEATED DIAGRAM

ACCESSORY INSTALLATION SUPPLEMENT

Door Limit and Magnetic Reed Switches

1. Mars door limit and magnetic reed switches are available with NEMA 1, 4X and 7 ratings. Contact the factory for additional ratings and details. (See FIG. 1 for typical single swing, hinged door type, door limit switch installation)

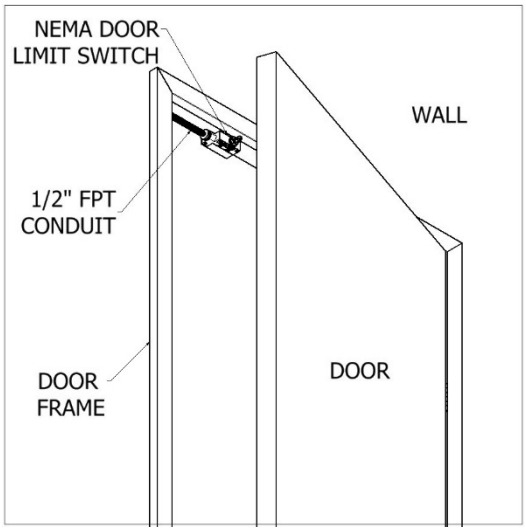

FIG. 1

2. Use light gauge materials when field fabricating brackets to activate and deactivate the door limit switch(s). (FIG. 2) Figure 2 also shows the typical installation of the combination plunger/roller type NEMA 1 door limit switch, for all non-hinged style doors.

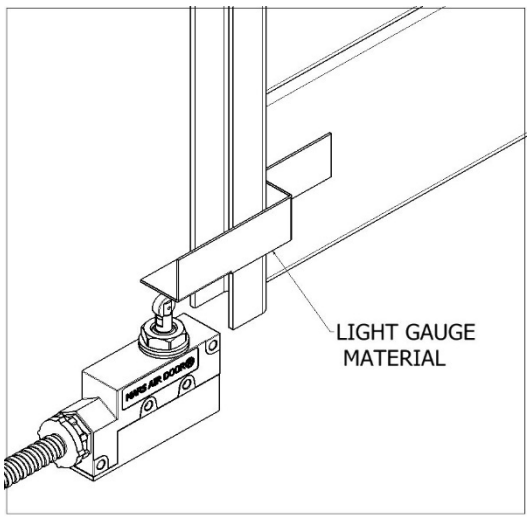

FIG. 2

3. All wiring must be per local and NEC (National Electric Code) codes.

4. Panels or controllers may be required. Refer to wiring diagram inside the control panel box.

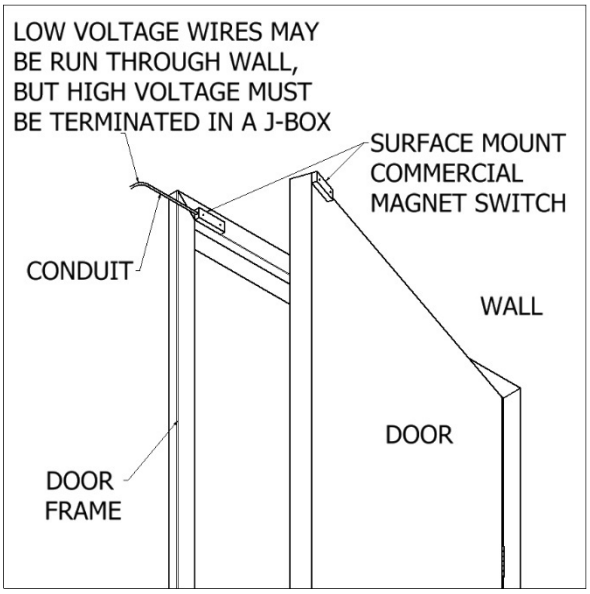

FIG. 3

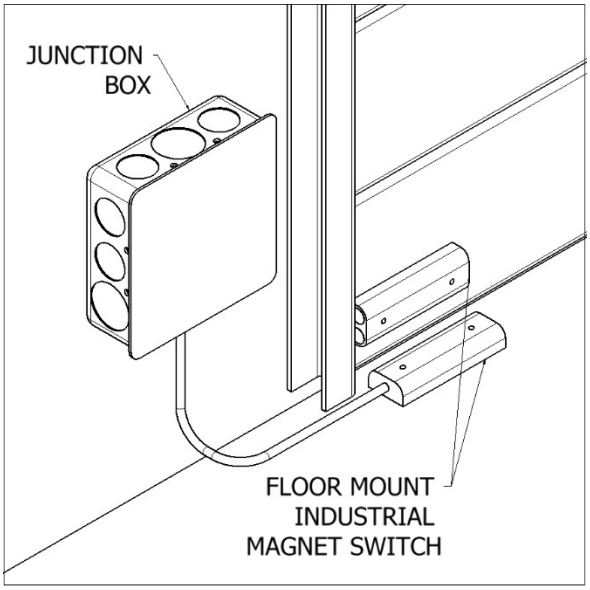

FIG. 4

atmosphere is everything

Bracket Installation

1. Side Extension Plates: For doorways wider than the air curtain, use combination of Side Extension Plates and Adjustable Mounting Brackets. (FIG. 5)

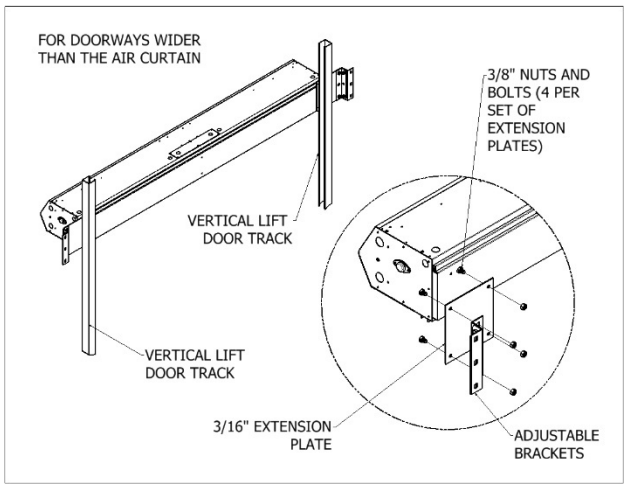

FIG. 5 (LPV SHOWN)

2. Adjustable Mounting Brackets: For installation of air curtain over drum-style roll-up door, use Extended Wall Mounting Brackets. (FIG. 6)

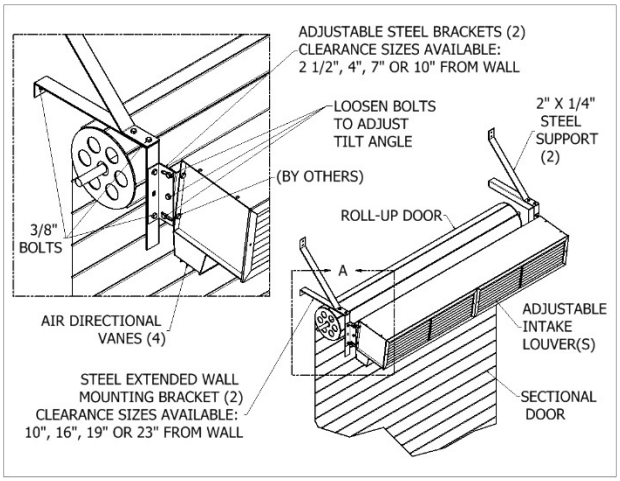

FIG. 6 (STD SHOWN)

3. Extended Wall Mounting: For Tandem Mounting of air curtain over sectional style door, use either wall mounting angle brackets or threaded rods.

4. Top Mounting Brackets: For overhead installation of units, use in conjunction with the threaded holes provided on top of unit.

Note: Angle brackets, threaded rods and I Beams are provided by others. (FIGS. 7 & 8) All optional brackets are not available for WMI/WMH and BD Series.

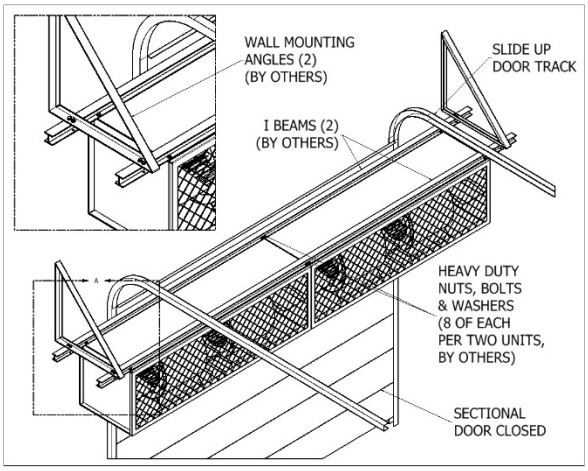

FIG. 7 (WMI/WMH Shown)

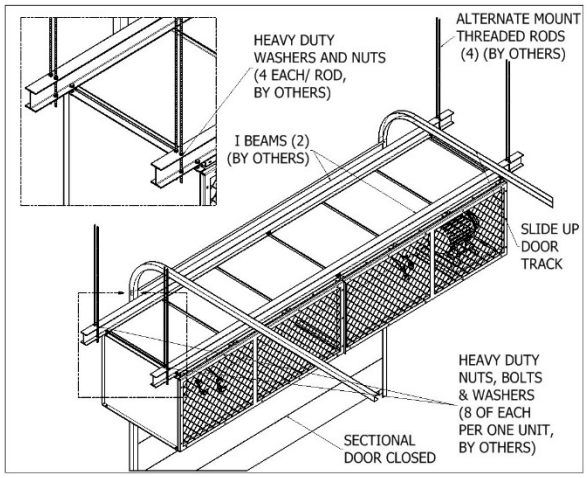

FIG. 8 (BD Shown)

atmosphere is everything

14716 S. Broadway St., Gardena, CA 90248

(310) 532–1555 • (800) 421-1266

Fax: (310) 324-3030

www.marsair.com

atmosphere is everything

Document No: ICM-IOM
Date: 08/24/20

PHANTOM (PH10 and PH12) COMMERCIAL AND INDUSTRIAL SERIES

Installation, Operation and Maintenance Manual

Please read and save these instructions. Read carefully before attempting to assemble, install, operate, or maintain the product described. Protect yourself and others by observing all safety information. Failure to comply with these instructions could result in personal injury and/or property damage. Retain these instructions for future reference.

OVERVIEW

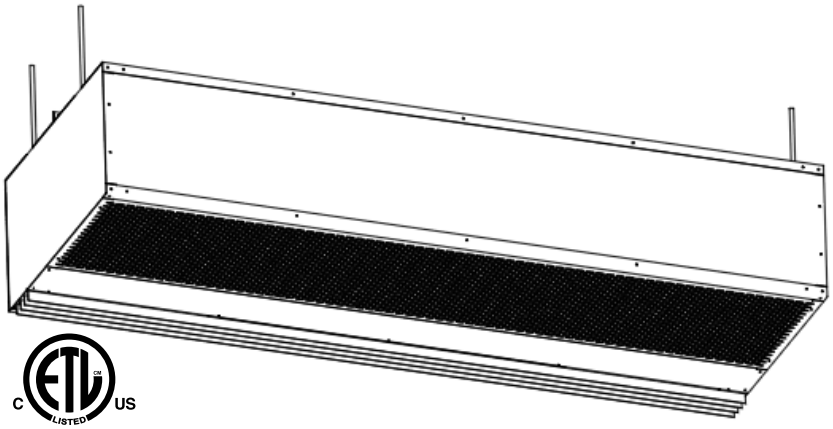

Intertek

Mars Air Curtains are designed to cover door openings, providing both temperature control/ environmental separation and flying insect control, when the building's doors are opened. Typical installation heights are: Phantom 10 Series (Environmental Separation up to 12' / Flying Insect Control up to 10'), and Phantom 12 Series (Environmental Separation up to 16' / Flying Insect Control up to 14'). The units are typically suspended from the ceiling and hidden inside the false roof. They can also be wall mounted using special brackets. The units are ETL Listed, Canada and US, for either an inside or outside mount. Heated units must be mounted on the inside or the protected side of the opening. The motors used in the Phantom 10 and Phantom 12 series are 1/2 HP and 1 HP, respectively.

The Phantom Series come standard with an air intake screen(s).

WARNING

When servicing the product, motor may be hot enough to cause pain or injury. Allow motor to cool before servicing.

GENERAL SAFETY INFORMATION

Use this product only in the manner intended by the manufacturer. If you have any questions, contact the manufacturer. Only qualified personnel should install this product. Installing personnel should have a clear understanding of these instructions and should be aware of general safety precautions. Improper installation can result in electric shock, possible injury due to coming in contact with moving parts, as well as other potential hazards.

WARNING

To reduce the risk of fire, electric shock, or injury to persons, observe the following.

A. Always disconnect, lock and tag power source before installing or servicing product.
B. Installation work or electrical wiring must be done by qualified person(s) in accordance with all applicable codes and standards, including fire-rated construction.
C. The combustion airflow needed for safe operation of fuel burning equipment in the area may be affected by the product's operation. Follow the heating equipment manufacturer's guideline and safety standards, such as those published by the National Fire Protection Agency (NFPA), the American Society of Heating, Refrigeration and Air Conditioning Engineers (ASHRAE) and local code authorities.
D. When cutting or drilling into a wall or ceiling, be careful not to damage electrical wiring and other hidden utilities.

WARNING

Precaution should be taken in explosive atmospheres.

RECEIVING AND INSPECTION

Upon receiving the product, check to make sure all items are accounted for by referencing the Bill of Lading to ensure all items were received. Inspect each carton for shipping damage before accepting delivery. Notify the freight carrier if any damage is noticed. The carrier will make notification on the delivery receipt acknowledging any damage to the product. All damage should be noted on all copies of the Bill of Lading which is countersigned by the delivering carrier. A Carrier Inspection Report should be filled out by the carrier upon arrival and a report given to the Traffic Department. If damaged upon arrival, file a claim immediately with the carrier. Any physical damage to the unit after acceptance is not the responsibility of Mars Air Systems.

UNPACKING

Verify that all parts, components and accessories, and the correct quantities of each have been received. If any items are missing, report shortages to Mars Air Systems directly to arrange for obtaining the missing items. Again, verify quantities received against those on the Bill of Lading only, as multiple shipments may be involved.

INSTALLATION

Typical Mounting – Wall or Ceiling Mounted Horizontally Above the Door Opening

1. Gently remove all packaging materials, hardware, and all other accessories from interior of unit prior to operating. Severe unit damage will occur if these items are not removed prior to operation.
2. The intake screen can be opened by removing the two screws on the bottom of the unit. The screen can be removed from the unit by pulling the spring-loaded piano hinges. (FIG. 1)
3. All Phantom series have the Motor Fan Assembly (MFA) shipped internally mounted.
4. All units are equipped with (4) 3/8'' threaded inserts on top for overhead installation (FIG. 2)
5. Determine the exact mounting locations to suspend the unit above the ceiling so that the unit is centered and parallel with the door opening. Use (4) threaded rods to suspend the enclosure to the ceiling.
   Note: When installed in the ceiling above the door, the air curtain must be moved 3/8" away from the wall for every 1" above the door height.
6. If applicable, extended wall mounting brackets are available for attaching the unit to a wall.
7. If applicable, for tandem installation (units longer than 72") of products mounted side by side, allow no more than 6" between the two units. Note that (4) sets of threaded rods are used to suspend each unit to the ceiling or center mounting brackets are to be used for joining and top mounting tandem units.
8. Mount the product such that the discharge is flush with the ceiling.
9. All wires must be connected internal of the unit and some knockouts are provided. However, it may be necessary to create your own knockout, as required.
10. The unit must be wired per NEC and local codes.

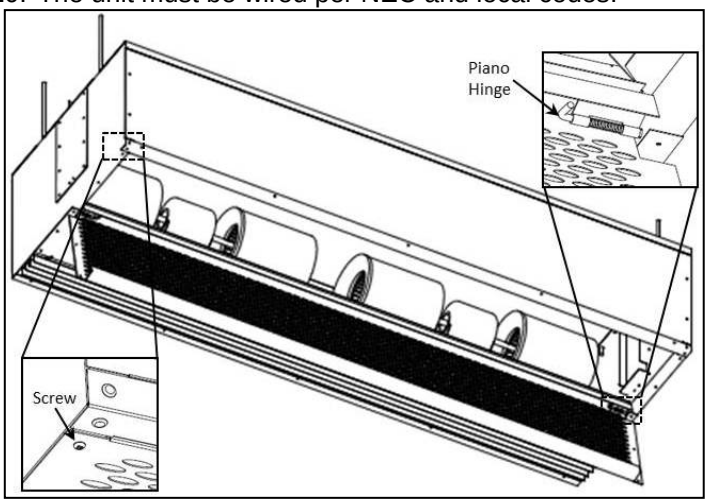

FIG 1

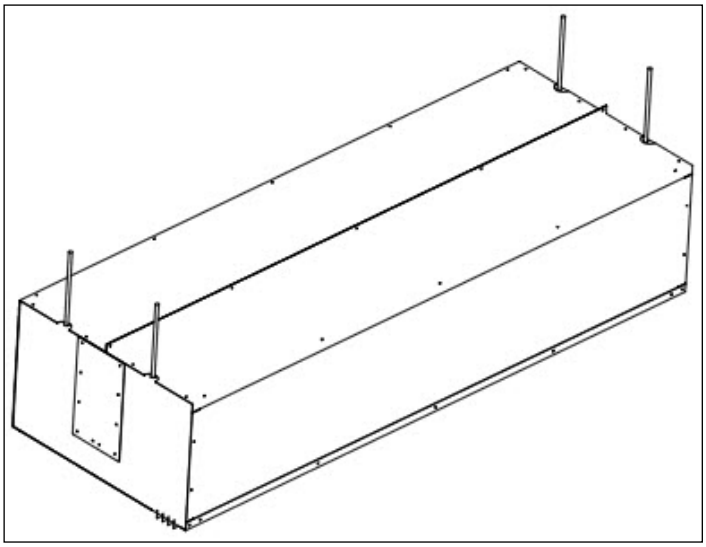

FIG. 2

Electrical Field Wiring

1. For electric models, reference the **Heated Products Supplement**.
2. The unit and any optional accessories must be wired with the proper voltage to the junction box per the wiring diagram. (FIG. 3, unheated products only)
3. All 3 phase motors are bi-directional, which means they can rotate in either direction. Follow directional arrows on the blower wheel housings for proper rotation. If the motor is rotating incorrectly, switch two of the 3 phase power or motor leads and the motor will rotate the opposite direction. Make sure all motors are turning in the same and proper direction. (FIG. 3)

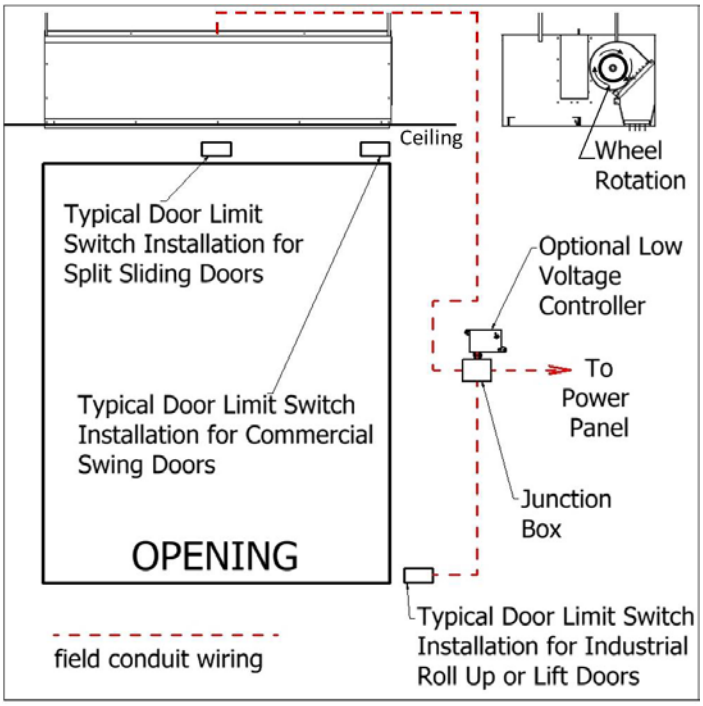

FIG. 3

NOTE

For accessory installation, reference Accessory Installation Supplement.

For heated products, reference Heated Products Supplement.

START-UP

This product has been assembled and tested at the factory prior to shipping. The following procedures should be performed to assure its performance. Before continuing with the start-up, it is important to recognize the safety controls furnished with the unit.

WARNING

Prevent hazard of electrical shock. More than one disconnect switch may be required to de-energize this product.

WARNING

The following items must all be completed by a qualified installer and checked off when completed

A. Re-check that the product has been installed properly and is level and secure.
B. Check all terminal screws are tight and field wiring is connected in accordance to National Electrical Code and wired per the enclosed wiring diagram. For electric heated models, ensure that the coils are secured and not touching each other on any metal surface.
C. Verify proper voltage prior to powering the product. (See product label for reference).
D. Check all field wired components “if supplied” are wired correctly.
E. Check that the inlet air supply and the discharge air supply are free of obstructions.
F. Check that all air filter(s) and/or air intake grille(s) are in place and installed properly, as originally shipped.
G. Verify voltage to the product once more and turn power on.
H. Regardless of whether the product is mounted on the inside or outside of the door opening, set the air directional vanes in the discharge nozzle slightly outward to approximately 10-15° towards the outside, or the wind load. (FIG. 4).

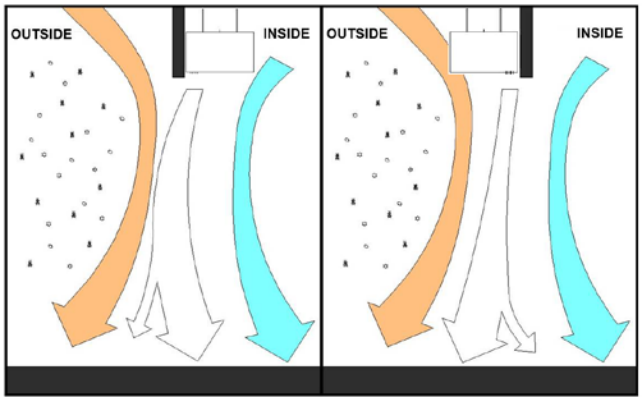

FIG. 4

I. For products with control panels, turn the HOA (Hand-On-Auto) selector switch to “On” position and open the door to energize the product. For products without a control panel or an On/Off switch, open the door to energize the product.
J. If heated products are installed, reference **Heated Products Supplement**.
K. For three phase units, verify direction of rotation of blower wheels (note direction arrows on the blower wheel housing). Correct if needed by changing polarity of three phase power.

L. **VERY IMPORTANT** Using a clamp meter, measure the amperage to each motor and ensure that they do not exceed the amperage listed on the product label.
M. If applicable, adjust the air intake grille(s) such that the output air stream reaches the floor. For temperature control and environmental separation applications, the air stream should reach the floor with sufficient strength to create an air seal around the door opening without creating turbulent mixing of the inside and outside air. If applicable, adjust the air intake grille(s) such that the output air stream reaches the floor. For flying insect control applications, the air stream should reach the floor with maximum strength. If after proper installation and adjustment, the product appears to be producing too little or too much air for the application, contact the manufacturer.

MAINTENANCE

WARNING

To reduce the risk of fire, electrical shock, or injury to persons, observe the following:

A. Maintenance is to be performed only by qualified personnel who are familiar with local codes and regulations and are experienced with this type of product.
B. Before servicing or cleaning the product switch power off at service panel and lock service panel to prevent power from being switched “ON” accidentally.

Routine maintenance is required to keep this product operating at its peak performance and efficiency. Over time, the housing, air intake grille, air intake filter, blower wheels and motor(s) will accumulate a build up of dust, debris and other residue. It is imperative to keep these components clean. Failure to do so will not only lower operational efficiency and performance, but also reduce the useful life of the product. The time between cleanings depends on the application, location, and daily hours of use. On average, under normal use conditions, the product should require a thorough cleaning once every six (6) months.

To clean the product, perform the following:

1. Verify the product has been disconnected from the power source.
2. Use a damp cloth and either a warm mild soapy water solution or bio-degradable degreaser, to wipe down the exterior components of the housing.
3. To access the interior of the product, remove the air intake grille(s) and/or air intake filter(s). This is accomplished by removing the screws on the face of the air intake grille(s)/filter(s) and releasing the grille by pulling on the spring hinge.
4. Thoroughly clean the air intake grille(s) and clean or replace the intake filter(s).
5. Thoroughly wipe down the motor, blower wheels and blower wheel housings. Be careful not to spray the motor with a water hose.
6. The motor(s) require no additional lubrication. They are permanently lubricated and feature double sealed ball bearings.
7. To re-install the product, reverse the procedures above.
8. Reconnect the power source to the product.
9. If you have any questions regarding the maintenance of the product, contact the manufacturer.

SPECIAL APPLICATIONS

Outdoor Installation

For outdoor unit special consideration may be required for enclosure, motor, wheel, and other components to minimize damage caused by exposure to the outdoor elements. Contact factory for special construction and costing.

Freezer and Cooler Installation

Air curtain must be mounted on the warm side for optimal performance. Variable Frequency Drive (VFD) is strongly recommended to control the air curtain air flow velocity at the floor level.

High humid areas may require de-humidifier or additional defrost cycle to minimize condensation and freezing for freezer applications. We recommend the air curtain unit to not replace doors but work in conjunction with door opening sequence cycle.
Contact factory for details.

DISCLAIMER

Mars reserves the right to change specifications and product design without notice. Such revisions do not entitle the buyer to corresponding changes, improvements, additions, or replacements for previously purchased equipment.

TROUBLESHOOTING

PROBLEM	CAUSE	SOLUTION
NO AIR BLOWING OUT OF DISCHARGE NOZZLE	- No power being supplied to the unit from the electrical power source - Circuit breaker is tripped - Blown fuses on power supply - Motor overload is open or tripped - Motor contactor / relay defective (if applicable) - Failed switch	- Confirm power source / check if in on position - Reset circuit breaker - Replace fuses - Allow the motor to cool down; motor has auto reset internal overload; if unit is panel equipped, press reset button on overload inside panel, or replace motor overload if overload remains tripped - Check voltage to coil; check contacts to see if they are pulling in - Replace or repair limit switch
MOTOR IS RUNNING BUT FANS ARE NOT SPINNING	- Loose or broken coupling (belt drive) - Loose set screws on wheel hubs - Fan spinning inside fan housing - Broken fan hub	- Replace or tighten coupling - Tighten set screws on motor shaft flats - Tighten fan on shaft or replace fan - Replace fan wheels
ELECTRICAL CONTROLS NOT WORKING WHEN DOOR IS OPEN	- Switch is in off position - Door limit switch is not operating	- Turn unit's switch to the on position - Repair or replace door limit switch
UNIT WILL NOT TURN OFF	- Door limit switch is permanently closed or energized	- Position the door switch in a manner that turns off the unit when the door closes and turns on the unit when the door opens. Only light pressure required.
LOW AIR FLOW	- Discharge air vanes out of adjustment - Obstruction on intake or discharge - Power leads out of polarity - Blower motor rotating below normal speed - Fan rubbing against housing - Blower wheels clogged with dirt	- Adjust vanes to proper position (Refer to Start-Up Section in this manual) - Remove obstruction or move air curtain - Switch power leads to correct polarity (3 phase models only) - Apply proper voltage per unit requirement (see unit label) / Adjust adjustable motor speed knob (if applicable) - Free fan from housing - Clean and remove dirt from blower wheels
EXCESSIVE AIR VELOCITY AT DOOR OPENING	- Nozzle out of adjustment and not angled far out enough (BD only) - Air temperature too cold - Air stream pushing air outside of the building	- Adjust nozzle angle to outside - Add auxiliary heat to overcome wind chill - Adjust discharge angle back into building
AIR NOT HITTING THE FLOOR	- Low air velocity - Obstruction in the direction of air flow - Negative building pressure	- Adjust vanes to proper position or check installation height (Refer to Start-Up Section in this manual) - Remove obstruction or move air curtain (Move out 3/8" for every 1" up from the door) - Provide a make-up air system to relieve negative building pressure
UNEVEN AIR	- Shaft rotating inside fan - One motor not functioning	- Replace fan or tighten fan on shaft - Replace or repair motor
EXCESSIVE NOISE AND OR VIBRATION	- Loose or broken coupling (belt drive) - Loose set screws on wheel hubs - Fan spinning inside fan housing - Broken fan hub - Bearing end caps worn - Damaged blower wheel - Bearing end caps worn - Balancing clips missing	- Replace or tighten coupling - Tighten set screws on motor shaft flats - Tighten fan on shaft or replace fan - Replace fan wheels - Replace Bearing end caps - Replace Blower Wheel - Replace Bearing end caps - Replace Blower Wheel

TROUBLESHOOTING MOTOR

To determine if the motor is in good operating condition, compare measured motor resistance at the motor terminals to the values shown below.

MARS MOTOR RESTANCE READINGS

Single Phase Motors

								MOTOR WIRES OR TERMINAL (T) OHM READINGS		
								HIGH SPEED (1750)	MEDIUM SPEED (1650)	LOW SPEED (1450)
Applicable Air Curtain Series	**Mars Part #**	**Manufacturer Part #**	**Brand**	**Motor Rating**	**HP**	**Voltage**	**Phase**	**Black Motor Wire & White Motor Wire**	**-**	**-**
LPV2, LPN2	03-001	7190-1682	Fasco	Nema 1	1/6	115	1	11.5	-	-
	03-002	7190-1903	Fasco	Nema 1	1/6	115	1	8.4	-	-
	03-003	7190-1825	Fasco	Nema 1	1/6	230	1	64	-	-
	03-004	7190-1904	Fasco	Nema 1	1/6	230	1	44.6	-	-
Applicable Air Curtain Series	**Mars Part #**	**Manufacturer Part #**	**Brand**	**Motor Rating**	**HP**	**Voltage**	**Phase**	**White Motor Wire (T1) & Black Motor Wire (T3)**	**White Motor Wire (T1) & Black Motor Wire (T5)**	**White Motor Wire (T1) & Black Motor Wire (T2)**
STD2, N2, PH10, QP10	03-010	34G928X169	Baldor	Washdown (IP54)	1/2	115	1	1.2	-	-
	03-010	34G928X169	Baldor	Washdown (IP54)	1/2	208/230	1	4.6	-	-
	03-005	7124-1175	Genteq	Nema 1	1/2	115	1	2.6	3.8	5.2
	03-006	7124-1560	Genteq	Nema 1	1/2	208/230	1	9.9	15.9	22.5
	03-007	48S17T439	Marathon	Nema 1	1/2	277	1	7.7	-	-
	03-005	K055PWM1736C13H	Nidec	Nema 1	1/2	115	1	2.1	3.7	5.2
	03-005	K055PWM1736C13H	US	Nema 1	1/2	115	1	5.3	3.7	5.4
	03-006		US	Nema 1	1/2	208/230	1	8.7	18.2	24.2
Applicable Air Curtain Series	**Mars Part #**	**Manufacturer Part #**	**Brand**	**Motor Rating**	**HP**	**Voltage**	**Phase**	**White Motor Wire (T1) & Black Motor Wire (T2)**	**White Motor Wire (T1) & Black Motor Wire (T3)**	**-**
HV2, NH2, PH12	03-021	35T276R025G1	Baldor	Washdown (IP54)	1	115	1	0.7	-	-
	03-015-Baldor	35M316S174	Baldor	Nema 1	1	115	1	0.6	-	-
	03-015-Baldor	35M316S174	Baldor	Nema 1	1	208/230	1	2.2	-	-
	03-021	35T276R025G1	Baldor	Washdown (IP54)	1	208/230	1	2.8	-	-
	03-014	7124-0985	Genteq	Nema 1	1	115	1	1.6	2.4	-
	03-015	7124-1096	Genteq	Nema 1	1	208/230	1	6.5	9.2	-
	03-015	-	Nidec	Nema 1	1	208/230	1	4.3	6.5	-
	03-014	K55BWJZB-2362	US	Nema 1	1	115	1	1	2.1	-
	03-015	-	US	Nema 1	1	208/230	1	3.2	6.3	-

Three Phase Motors

								LEAD WIRE OHM READINGS		
Applicable Air Curtain Series	**Mars Part #**	**Manufacturer Part #**	**Brand**	**Motor Rating**	**HP**	**Voltage**	**Phase**	**Black Motor Wire (L1) & Red Motor Wire (L2)**	**Black Motor Wire (L1) & White Motor Wire (L3)**	**Red Motor Wire (L2) & White Motor Wire (L3)**
STD2, N2, PH10, QP10	03-008	P55YYDHB-1527	US	Nema 1	1/2	208-230	3	16.1	16.1	16.1
	03-008	P55YYDHB-1527	US	Nema 1	1/2	460	3	63.6	63.6	63.6
	03-009	48T17T135	Marathon	Nema 1	1/2	575	3	136	136	136
HV2, NH2, PH12	03-017	56T17T5541	Marathon	Nema 1	1	208-230	3	4.3	4.3	4.3
	03-017	56T17T5541	Marathon	Nema 1	1	460	3	16.5	16.5	16.5
	03-018	56T17T5544	Marathon	Nema 1	1	575	3	26.6	26.6	26.6
	03-022	35N127S902	Baldor	Washdown (IP54)	1	208-230	3	5.1	5.1	5.1
	03-022	35N127S902	Baldor	Washdown (IP54)	1	460	3	19.8	19.8	19.8
EP2	03-026	165716	Century	Nema 1	3	208-230	3	1.5	1.5	1.5
	03-026	165716	Century	Nema 1	3	460	3	5.7	5.7	5.7
	03-028	35E92Y26	Baldor	Nema 1	3	575	3	9.2	9.2	9.2
WMI	03-110	36H110-2211G1	Baldor	Nema 1	1,2,3	208-230	3	3.5	3.5	3.5
	03-110	36H110-2211G1	Baldor	Nema 1	1,2,3	460	3	13.5	13.5	13.5
WMH	03-055	37F932W828G1	Baldor	Nema 1	5	230	3	0.7	0.7	0.7
	03-055	37F932W828G1	Baldor	Nema 1	5	460	3	2.4	2.4	2.4
	03-046	37F909X889G1	Baldor	Nema 1	7	230	3	0.6	0.6	0.6
	03-046	37F909X889G1	Baldor	Nema 1	7	460	3	1.6	1.6	1.6
BD	03-033	U639A - 215TTFC6027	Marathon	Nema 1	10	208-230	3	0.4	0.4	0.4
	03-033	U639A - 215TTFC6027	Marathon	Nema 1	10	460	3	1.2	1.2	1.2
	03-074	GT1128A 170118.60	Marathon	Nema 1	25	575	3	0.5	0.5	0.5

WARRANTY

Mars' warranty coverage, period, extent, and limitations apply to the product only. It does not apply to labor. Mars warrants that Mars product 1) Is free from defects in materials and workmanship and 2) Conforms to Mars' published specifications. The warranty period for Mars product except heated and custom models, is a five (5) year period commencing on its date of shipment. The date on customer's invoice is the date of shipment unless Mars or your reseller informs you and Mars otherwise. For heated products, the warranty period is an eighteen (18) month period and for custom products and accessories, the warranty period is twelve (12) months period commencing the date of shipment. Mars will provide free replacement of any part that fails as a result of a defect in material or manufacturer's workmanship. Changes in operational specification parameters that are different from those provided on the original purchase order are not covered. Mars product is inspected and tested before packaging and is shipped in working condition. The warranty for Mars product only covers free-of-charge replacement of failed parts. The warranty does not cover labor and transportation expenses that may be required to provide and to install replacement parts. Because in many instances, it is impossible to determine the cause of failure, customer may be responsible for transportation charges associated with replacement of failed part. Mars does not warrant uninterrupted or error-free operation of Mars product. Under no circumstance is Mars liable for any of the following: 1) Third-party claims against you for damages; or 2) Special, incidental, or indirect damages or for any economic consequential damages (including lost profits and savings), even if Mars, its suppliers, or its reseller is informed of their possibility. The warranty does not cover repair or exchange of Mars product resulting from misuse, accident, modification, unsuitable physical or operating environment, improper maintenance and installation by customer, or failure caused by a product for which Mars is not responsible. The warranty does not cover damages caused by mishandling during transportation. The warranty is voided by removal or alteration of Mars product or parts identification labels, by improper installation of product, and resulting non-compliance to federal, state and local codes and regulations. Additionally, Mars reserves the right to void the warranty for non-payment of invoice.

CONTACT FACTORY FOR COMPLETE PARTS LIST FOR ALL MODELS.

KEEP THIS MANUAL FOR YOUR RECORDS.

Model Number:_____

Serial Number: _____

Date Purchased: _____

Dealer Purchased From: _____

atmosphere is everything

14716 S. Broadway St., Gardena, CA 90248

(310) 532–1555 ● (800) 421-1266

Fax: (310) 324-3030

Please go to our website at www.marsair.com for a downloadable version of this document.

atmosphere is everything

SECTION 23 34 33

AIR CURTAINS

Important Note: This specification contains hidden text appearing in red. To show or remove hidden text in MSWord, click the "File" tab or "Office" icon on the top-left corner, select "Options," select "Display," and check or uncheck the box marked "Hidden Text."

PART 1 GENERAL

1.1 SECTION INCLUDES

A. Air curtains for pedestrian entrances.

B. Air curtains for vehicular entrances.

1.2 RELATED SECTIONS

A. Section 05 50 00 – Metal Fabrications: Concealed steel support members.

B. Section 06 10 00 – Rough Carpentry.

C. Section 05 41 00 – Structural Metal Studs.

D. Section 07 62 00 – Sheet metal flashing.

E. Section 07 92 00 – Joint Sealants.

F. Section 08 10 00 – Metal Doors and Frames.

G. Section 08 33 00 – Overhead Coiling Doors.

H. Section 08 42 00 – Entrance Doors.

I. Section 22 10 00 – Plumbing Piping:

J. Section 23 21 00 – Hydronic Piping: Hot water heating piping to units.

K. Section 23 22 13- Steam and Condensate Piping: Steam heating piping to units.

L. Section 26 05 00 – Equipment Wiring: Connections to building power distribution.

1.3 REFERENCES

A. ASTM A240 / A240M -10 – Standard Specification for Chromium and Chromium.

B. ASTM A591/A591M Standard Specification for Steel Sheet, Electrolytic Zinc-Coated, for Light Coating Weight Applications

C. ASTM B209 – Standard Specification for Aluminum and Aluminum-Alloy Sheet and Plate

D. ASTM A879 / A879M -06 – Standard Specification for Steel Sheet, Zinc Coated by the Electrolytic Process for Application Requiring Designation of the Coating Mass on Each Surface.

E. UL 507 – UL Standard for Safety Electric Fans – Intertek Testing Services Listed for US and Canada.

F. AHRI 410-2001 – Standard for Forced-Circulation Air-cooling and Air-Heating Coils.

G. Electrical components UL/CUL listed.

H. AMCA 211 Certified

I. ELT

J. NEC – National Electric Code.

K. Meets NEC and CEC tested by ETL Certified to conform to UL2021(US) and CSA22.2 (Canada) Standards

L. UL/CUL listed

M. U.S. Green Building Council, LEED Building Design and Construction (BD+C) Version 4.0 Rating System. (LEED v4.0).

1.4 SUBMITTALS

A. Submit under provisions of Section 01 33 00.

B. Product Data: Manufacturer's data sheets on each product to be used, including:
1. Preparation instructions and recommendations.
2. Storage and handling requirements and recommendations.
3. Installation methods.

C. Shop Drawings: Include plans, elevations, sections, and details, indicating dimensions, tolerances, materials, fasteners, hardware, finish, piping, electrical wiring diagrams, options, and accessories.

D. LEED Submittals: Provide documentation of how the requirements of Credit will be met:
   1. List of proposed materials with recycled content. Indicate post-consumer recycled content and pre-consumer recycled content for each product having recycled content.
   2. Product data and certification letter indicating percentages by weight of post-consumer and pre-consumer recycled content for products having recycled content.

E. Selection Samples: For each finish product specified, two complete sets of color chips representing manufacturer's full range of available colors and patterns.

F. Verification Samples: For each finish product specified, two samples, minimum size 6.25 inches (160 mm) square, representing actual product, color, and patterns.

G. Manufacturer's Certificates: Certify products meet or exceed specified requirements.

H. Operation and Maintenance Manual: Submit manufacturer's operation and maintenance manual, including operation, maintenance, adjustment, and cleaning instructions, troubleshooting guide, parts list, and electrical wiring diagrams.

1.5 QUALITY ASSURANCE

A. Manufacturer Qualifications: Minimum ten years documented experience producing the products specified in this Section

B. Installer Qualifications: Minimum five years documented experience installing products specified in this Section

1.6 DELIVERY, STORAGE, AND HANDLING

A. Store products in manufacturer's unopened packaging until ready for installation.

B. Store in a dry, heated storage area until installation of products.

C. Protect materials and finish from damage during handling and installation.

1.7 SEQUENCING

A. Ensure that locating templates and other information required for installation of products of this section are furnished to affected trades in time to prevent interruption of construction progress.

B. Coordinate the installation of wiring and control switches for air curtains with the openings and the hardware provided for such openings.

C. Install after doors, walls, ceilings, and other adjacent surfaces are finished and painted.

1.8 WARRANTY

A. Standard five-year limited parts warranty for unheated units against defects in workmanship and material.

B. Standard 18-month limited parts warranty for heated units against defects in workmanship and materials.

PART 2 PRODUCTS

2.1 MANUFACTURER

A. Acceptable Manufacturer: Mars Air Systems, LLC; 14716 South Broadway St., Gardena, CA 90248. Tel: (310) 532-1555 or (800) 421-1266. Fax: (310) 324-3030. Email: info@marsair.com. Web: www.marsair.com.

B. Delete one of the following two paragraphs: coordinate with requirements of Division 1 section on product options and substitutions.

C. Requests for substitutions will be considered in accordance with provisions of Section 01 33 00.

2.2 AIR CURTAIN ASSEMBLIES

A. Motor Fan Assembly: Design for easy removal, assembly, repair, and maintenance.
   1. Motor: Totally enclosed air over (TEAO) cooled motor with sealed lifetime pre-lubricated ball bearings, motor starter and thermal overload protection.
      a. Wired for single speed operation.
      b. Wired for two speed operation.
      c. Wired for three speed operation.
      d. Provide wash down type motors, NEC IP-54 for the locations indicated.
      e. Provide explosion proof type motors, NEC Class 1, Division 1, Group D for the locations indicated.
      f. Electrical Characteristics: 115V AC, single-phase; 9 Amp full load per motor/fan.
      g. Electrical Characteristics: 208/230V AC, single-phase; 5 Amp full load per motor/fan.
      h. Electrical Characteristics: 208/230V AC, three-phase; 3.3/3.2 Amp full load per motor/fan.
      i. Electrical Characteristics: 460V AC, three-phase; 1.6 Amp full load per motor/fan.
      j. Electrical Characteristics: 575V AC, three-phase; 1.3 Amp full load per motor/fan
      k. Meets NEC. ETL Listed to conform to UL 507 (US) and CSA22.2 (Canada) Standards. AMCA 211 Certified.
   2. Fans: Forward curved centrifugal type, double width, and double inlet design, directly driven to an electric motor.

a. Provide resilient isolation dampening mountings between motor frame and motor mounting pan.
b. Factory balanced blower wheel assembly statically and dynamically.

B. Housing: Self-contained one-piece type for units up to 72 inches in length with sufficient strength for mounting from pre-punched mounting holes at both ends to ceiling without intermediate support. Units longer than 72” are two units tandem mounted next to each other

1. Size:
   a. Unheated: 26 inches deep by 15-1/2 inches high by width of unit.
   b. Electric Heated: 26 inches deep by 15-1/2 inches high by width of unit.
   c. Hot Water/Steam Heated: 26 inches deep by 15-1/2 inches high by width of unit plus 10 inches for manifolds.
2. Mounting:
   a. Unheated Inside Mount.
   b. Heated Inside Mount.
   c. Unheated Outside Mount.
   d. Mount Location Indicated.
3. Material:
   a. Provide T5052 20 gage aluminum conforming to ASTM B 209 and 20-gauge electro or hot dipped galvanized steel sheet housing conforming to ASTM A 591 and/or ASTM A 653.
   b. Provide type 304 stainless steel housing with brushed finish. ASTM A 240/A 240M.
4. Air Inlet Grille and/or Filters: Provide air inlet grille and/or filters specified.
5. Discharge: Provide integral discharge nozzle specified.
6. Finish and Color: Provide with, no VOC, corrosion resistant polyurethane powder coated finish for sheet metal housings.
   a. Pearl White.
   b. Obsidian Black.
   c. Titanium Silver.
   d. Stainless Steel.

C. Environmental Air Curtains: Internal mounted models for heights up to 16 feet (4877 mm) for Environmental Separation and Temperature Control and up to 14 feet (4267 mm) for Flying Insect Control.

1. Discharge Nozzle: Adjustable air foil vanes with a plus/minus 40-degree sweep front to back.
2. Air Velocity at Nozzle:
   a. PH12 42-1: 42 Inch (1065 mm) Wide Units: 2824 feet/min (14.3 m/s) single 1HP motor/fan assembly.
   b. PH12 48-1: 48 Inch (1220 mm) Wide Units: 2534 feet/min (12.9 m/s) single 1HP motor/fan assembly.
   c. PH12 60-1: 60 Inch (1524 mm) Wide Units: 2207 feet/min (11.2 m/s) single 1HP motor/fan assembly.
   d. PH12 72-2: 72 Inch (1830 mm) Wide Units: 3097 feet/min (15.7 m/s) two 1HP motor/fan assemblies.

e. PH12 84-2: 84 Inch (2133 mm) Wide Units: 2824 feet/min (14.3 m/s) two 1HP motor/fan assemblies.
f. PH12 96-2: 96 Inch (2440 mm) Wide Units: 2534 feet/min (12.9 m/s) two 1HP motor/fan assemblies.
g. PH12 120-2: 120 Inch (3050 mm) Wide Units: 2207 feet/min (11.2 m/s) three 1HP motor/fan assemblies.
h. PH12 144-4: 144 Inch (3660 mm) Wide Units: 3097 feet/min (15.7 m/s) four 1HP motor/fan assemblies.

3. Air Speed at Floor: Minimum of 400 fpm (2 m/s) at 3 feet (914 mm) from the floor.
4. Air Inlet Grille and Filters:
   a. Location: Bottom/
      1) Filter: Cleanable polyester filter, 1 inch (25.4 mm).
   b. Type: Fixed air intake grille
      1) Filter: Aluminum mesh, 1/4 inch (6.4 mm), washable.
   c. Type: Filter Only as follows:
      1) Filter: Flat bank 1 inch, disposable.
      2) Filter: Aluminum mesh, 1/4 inch (6.4 mm), washable
   d. Speed: 4000 cu ft/min (1888 L/s), minimum, per motor/fan assembly.
5. Sound Pressure Level At 10 feet (3 m) From Nozzle:
   a. Single Motor/Fan Units: 70 dBA.
   b. Two Motor/Fan Units: 73 dBA.
   c. Three Motor/Fan Units: 75 dBA.
   d. Four Motor/Fan Units: 75 dBA

2.3 COMPONENTS

A. Electric Heaters: Provide complete with motor control panel factory mounted to air curtain housing, and thermostat to be field installed.
   1. Temperature limit controller.
   2. Thermostat: Wall-mounted, 24-Volt operation, with heater on/off selection.
   3. Heating Coils: ETL approved as part of unit. Meets NEC and CEC tested by ETL Certified to conform to UL2021(US) and CSA22.2 (Canada) Standards. Factory mounted on the discharge end of the motor fan assembly and located within the nozzle outlet.

B. Steam Heaters: Provide finned tube steam coils for field mounting on air intake side of the air curtain cabinet with opposite end connections.
   1. Meets NEC and CEC tested by ETL Certified to conform to UL1995(US) and CSA22.2 (Canada) Standards.
   2. Output: Air curtain manufacturer's standard, one-row coils.
   3. Output: Air curtain manufacturer's standard, two-row coils.
   4. Coils: Certified in accordance with AHRI 410.
   5. Connections: Opposite end.
   6. Connections: Same end, right hand.
   7. Connections: Same end, left hand.
   8. Casing: One-piece unpainted galvanized steel, bolted to air curtain housing.
   9. Supply and return fittings on ends of casing.
   10. Thermostat: Wall-mounted, 110-Volt operation, with heater on/off selection.

C. Hot Water Heaters: Provide finned tube water coils for field mounting on air intake side of the air curtain cabinet with opposite end connections.
   1. Meets NEC and CEC tested by ETL Certified to conform to UL1995(US) and CSA22.2 (Canada) Standards.
   2. Output: Air curtain manufacturer's standard, one-row coils.
   3. Output: Air curtain manufacturer's standard, two-row coils.
   4. Coils: Certified in accordance with AHRI 410.
   5. Connections: Opposite end.
   6. Connections: Same end, right hand.
   7. Connections: Same end, left hand.
   8. Casing: One-piece unpainted galvanized steel, bolted to air curtain housing.
   9. Supply and return fittings on ends of casing.
   10. Thermostat: Wall-mounted, 110-Volt operation, with heater on/off selection.

D. Motor Control Panels for Unheated Units: Recommended for all three-phase units and single-phase units with combined motor capacities of more than 1 HP whenever a door limit switch is used to automatically start and stop the air curtain. Provide motor control panels as follows:
   1. Mounting: Factory mounted on right hand side of air curtain housing.
   2. Mounting: Factory mounted on left hand side of air curtain housing.
   3. Electrical components UL/CUL listed.
   4. Optional Digital Programmable Controller:
      a. Remote Mounted High Resolution 5” Color LCD Display with Capacitive Touch technology
      b. Fully programmable controller
      c. Pre-set and fully customizable programs
      d. Time delay (Passive & Adaptive)
      e. 24/7 timer
      f. Maintenance schedule alerts
      g. Status display showing date, time, temperature, and air curtain mode
      h. Multi-unit control capability
      i. English (IP) or Metric (SI) display readings
      j. Password protected
      k. Auto Lock display
      l. Emergency shut-off button
      m. Low voltage control signal for door activation
      n. Integrated BMS controls
      o. VFD compatible with 0-10VDC output
      p. Optional BACnet option
      q. Optional adaptive fan speed control based on existing

E. Motor Control Panels for Electric Heated Units: Recommended for all units whenever a door limit switch is used to automatically start and stop the air curtain. Thermostat is included with optional motor control panel for field installation. Provide motor control panel as follows
   1. Mounting: Factory mounted on right hand side of air curtain housing.
   2. Mounting: Factory mounted on left hand side of air curtain housing.
   3. Electrical components UL/CUL listed.

4. Optional Digital Programmable Controller:
    a. Remote Mounted High Resolution 5” Color LCD Display with Capacitive Touch technology
    b. Fully programmable controller
    c. Pre-set and fully customizable programs
    d. Time delay (Passive & Adaptive)
    e. Factory Integrated temperature control sensors. No external thermostat required.
    f. Summer-Winter modes
    g. 24/7 timer
    h. Maintenance schedule alerts
    i. Status display showing date, time, temperature, and air curtain mode
    j. Multi-unit control capability
    k. English (IP) or Metric (SI) display readings
    l. Password protected
    m. Auto Lock display
    n. Emergency shut-off button
    o. High temperature lock from fan failure
    p. Low voltage control signal for door activation
    q. Integrated BMS controls
    r. VFD compatible with 0-10VDC output
    s. Optional BACnet option
    t. Optional adaptive fan speed control and heat control based on existing field conditions. Field mounted outdoor temperature sensors required.

F. Motor Control Panels For Hot Water and Steam Heated Units: Recommended for all three-phase units and single-phase units with combined motor capacities of more than 1HP whenever a door limit switch is used to automatically start and stop the air curtain. Provide motor control panels as follows:
1. Mounting: Shipped loose to be field mounted.
2. Mounting: Factory mounted on right hand side of air curtain housing.
3. Mounting: Factory mounted on left hand side of air curtain housing.
4. Provide with remote mount thermostat for field installation.
5. Electrical components UL/CUL listed.
6. Optional Digital Programmable Controller:
    a. Remote Mounted High Resolution 5” Color LCD Display with Capacitive Touch technology
    b. Fully programmable controller
    c. Pre-set and fully customizable programs
    d. Time delay (Passive & Adaptive)
    e. Factory Integrated temperature control sensors. No external thermostat required.
    f. Summer-Winter modes
    g. 24/7 timer
    h. Maintenance schedule alerts
    i. Status display showing date, time, temperature, and air curtain mode
    j. Multi-unit control capability
    k. English (IP) or Metric (SI) display readings

l. Password protected
m. Auto Lock display
n. Emergency shut-off button
o. High temperature lock from fan failure
p. Low voltage control signal for door activation
q. Integrated BMS controls
r. VFD compatible with 0-10VDC output
s. Optional BACnet option
t. Optional adaptive fan speed control and heat control based on existing field conditions. Field mounted outdoor temperature sensors required.

G. Door-Activated Limit switch(s): Provide, field installed 250-Volts, 20 amps limit switch to control air curtain(s) as follows; Automatic on/off control, activates air curtain when door is opened and turns off when door is closed. Provide limit switch for direct control one 1 HP or up to two 1/2 HP single-phase motors without a separate control panel. Provide a separate control panel for three-phase motors and/or units exceeding 1 HP, 250-Volts or 20 amps controlled by a limit switch.
1. Type: Combination plunger/roller switch for swing and sliding doors.
a. Provide limit switches with NEMA 1 (20 amps) ratings in locations indicated.
b. Provide limit switches with NEMA 4X (10 amps) ratings in locations indicated.
c. Provide limit switches with NEMA 4X (15 amps) ratings in locations indicated.
d. Provide limit switches with NEMA 7 (10 amps) ratings in locations indicated.
2. Operation for Unheated Units: Automatic on/off control, on when door is opened, off when door is closed.
3. Operation for Gas Heated Units: Automatic on when door is opened, off after time delay period (60 seconds) after door is closed.

H. Provide mounting hardware as required for the opening.

PART 3 EXECUTION

3.1 EXAMINATION

A. Verify that required utilities are in correct location and are of correct capacities for specified products.

B. Verify openings to receive air curtains are plumb, level, square, accurately aligned, correctly located, and in tolerance.

C. Examine surfaces to receive air curtains. If surface preparation is the responsibility of another installer, notify Architect of unsatisfactory preparation before proceeding.

3.2 INSTALLATION

A. Install air curtains in accordance with approved shop drawings and manufacturer's printed installation instructions.

B. Install air curtains plumb, level, square, true to line, and weathertight, without warp or rack.

C. Anchor air curtains securely in place to supports.

D. Coordinate with sheet metal flashing as specified in Section 07 62 00.

E. Install joint sealants as specified in Section 07 92 00.

F. Coordinate with electrical power as specified in Section 26 05 00.

G. Install door limit switches and adjust for correct operation.

H. Provide connection to piped services and utilities as specified in Section 22 10 00 and 23 21 00.

3.3 FIELD QUALITY CONTROL

A. Adjust air curtains to function properly.

B. Adjust air foil vanes located within the discharge nozzle as required for prevailing conditions at each opening.

C. Check heated air curtain performance on a calm day by measuring air temperature 6 inches off the floor. Optimal reading is halfway between the temperature inside and outside the building.

3.4 CLEANING

A. Clean air curtains promptly after installation in accordance with manufacturer's instructions.

B. Repair minor damages to finish in accordance with manufacturer's instructions and as approved by Architect.

C. Remove and replace damaged components that cannot be successfully repaired as determined by Architect.

3.5 PROTECTION

A. Protect materials and finish from damage until substantial completion.

3.6 SCHEDULES

A. Refer to Air Curtain Schedule appended to this section.

END OF SECTION

atmosphere is everything
14716 S. BROADWAY, GARDENA, CA 90248 ● Ph: (310)532-1555 Fax: (310)-532-3030 ● www.marsair.com
© Copyright Mars Air Systems, LLC 2014

Reference Links

Link	Description
https://marsair.com	**Main website**
https://marsair.com/document-library	**Submittals for all Mars Air Curtains, Accessories, Installation, and Brochures**
https://www.marsair.com/Content/Downloads/CSISpecs/PH10-CSI-Specification.doc	**Phantom Series CSI spec (Word doc)**

NOTE: MARS AIR SYSTEMS, LLC reserves the right to change specifications and product design without notice. Such revisions do not entitle the buyer to corresponding changes, improvements, additions, or replacements for previously purchased equipment.