OPTIONS By Broilmaster

BROILMASTER®
PREMIUM GRILLS

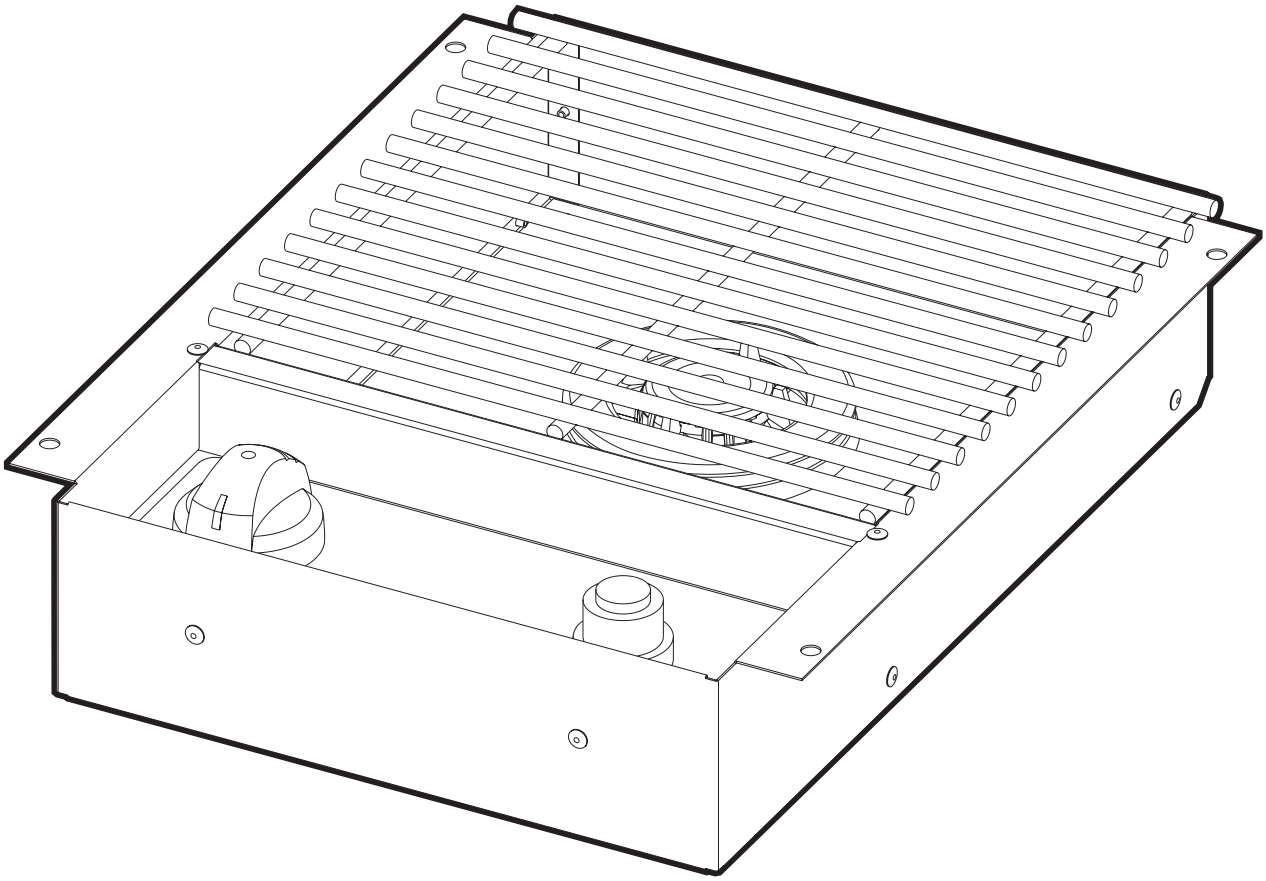

BF Side Burner

NATURAL OR PROPANE
DPA150-1

Retain Owner's Manual for Future Reference.

IMPORTANT INFORMATION

IMPORTANT

This manual should be read thoroughly by the person installing the Side Burner and all persons who will use and maintain the Side Burner. The installer should be sure the manual is left in the possession of the user. The user should retain this manual for future reference when using or cleaning the Side Burner and to properly identify any repair parts that may be required.

⚠ WARNING

Follow the instruction in this manual for proper installation and maintenance of the DPA150 Side Burner. Improper installation, adjustment, alteration, service or maintenance can cause injury or property damage. For assistance or additional information consult a qualified installer, service agency or the gas supplier.

IF YOU SMELL GAS:

1. **Shut off gas to the appliance.**
2. **Extinguish any open flame.**
3. **Open the grill lid.**
4. **If odor continues, immediately call your gas supplier or fire department.**
5. **Do not touch electrical switches.**

⚠ WARNING: FOR YOUR SAFETY

Do not store or use gasoline or other flammable vapors or liquids in the vicinity of this or any appliance.

An LP cylinder not connected for use shall not be stored in the vicinity of this or any other appliance.

⚠ CAUTION:

Parts may have sharp edges. Wear leather work gloves and handle parts carefully during unpacking, assembly and installation.

⚠ WARNING

Broilmaster Side Burners equipped for propane gas must ONLY use propane cylinders equipped with an Overfill Protection Device (OPD). Use only a reputable propane dealer when exchanging or filling cylinders. An overfilled or improperly filled propane cylinder can be dangerous.

Thank you for purchasing a Broilmaster Side Burner.

Broilmaster takes pride in its reputation as the The Most Durable Grill Known to Man.

From its thick aluminum casting to its massive cooking grids, your Broilmaster is built to last. In fact we still make replacement parts for Broilmaster grills built more than 30 years ago.

Visit www.broilmaster.com and click on the Hall of Fame to see a sampling of our long-time customers. We hope you enjoy years of great meals prepared on your Broilmaster. And we hope to add your photo to the Hall of Fame one day.

Thank You!

Broilmaster is a registered trademark of

Empire Comfort Systems, Inc.
918 Freeburg Ave.
Belleville, Illinois 62220
Telephone 800-851-3153

TABLE OF CONTENTS

You have chosen the finest grill for your outdoor cooking pleasure.
Please take time to read this entire manual before assembling your Broilmaster Side Burner.

ASSEMBLY INSTRUCTIONS 5

DPA150 SIDE BURNER ASSEMBLY 6-16

DPA150 PARTS DIAGRAM 6

DPA150 HARDWARE PACK - B101982 7

DPA150 - INJECTOR (LP) 7

CONNECT IGNITOR LEADS 8

REMOVING LID 9-10

INSTALL SIDE BURNER TO FRAME 11

BATTERY PLACEMENT 12

INSTALL SIDE BURNER COMPONENTS 13

ATTACHING SIDE BURNER TO BRACKET 14

INSTALL GRATE 15

ORIENT LIFTER TAB 16

PROPANE GAS CONNECTION 17-20

NATURAL GAS CONVERSION 20

NATURAL GAS CONNECTION 21-22

COMPLETED ASSEMBLY 23

OWNER'S MANUAL FOR DPA150 SIDE BURNER 24-31

OPERATION - PROPANE AND NATURAL GAS GRILLS 24-25

IMPORTANT SAFETY INFORMATION 26-27

COOKING TIPS 28

WARRANTY TERMS 29

MASTER PARTS DISTRIBUTOR LIST 30

HOW TO ORDER REPAIR PARTS 30

GRILL MAINTENANCE HISTORY 31

ASSEMBLY INSTRUCTIONS

Before You Begin

Compare the parts in the box to the parts list provided in this manual. If any are missing, contact your Broilmaster dealer before beginning assembly.

This Side Burner must be installed into either a DPA152 Built-In Sleeve or a DPA153 Side Shelf.

CAUTION:
Parts may have sharp edges. For your safety wear leather work gloves and handle parts carefully during unpacking and assembly.

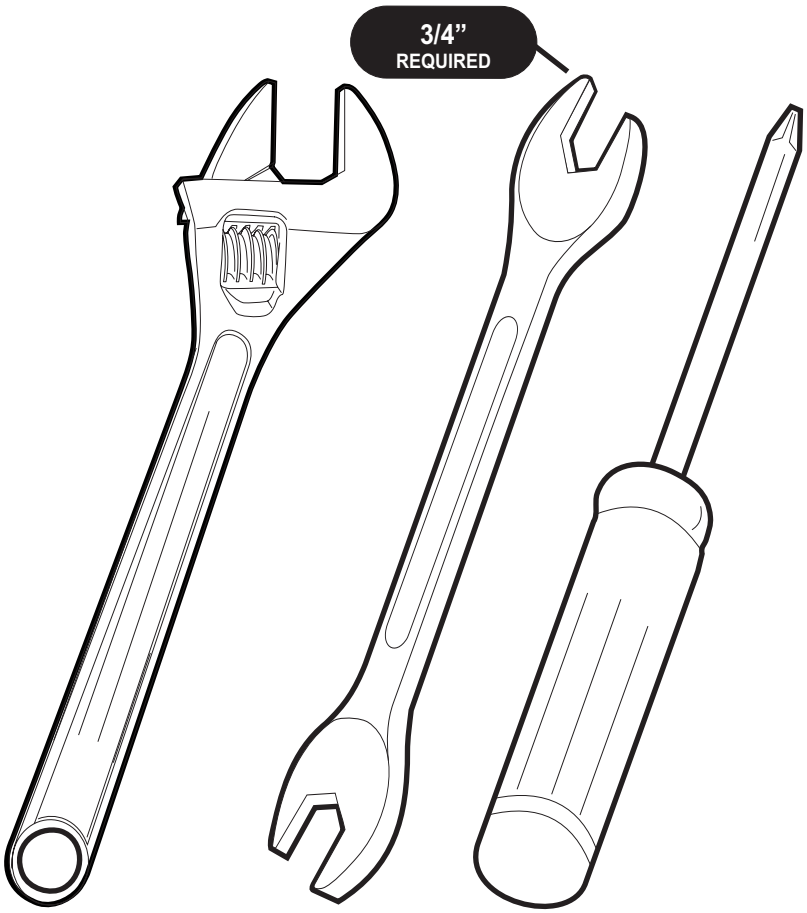

TOOLS
REQUIRED

DPA150 PARTS DIAGRAM

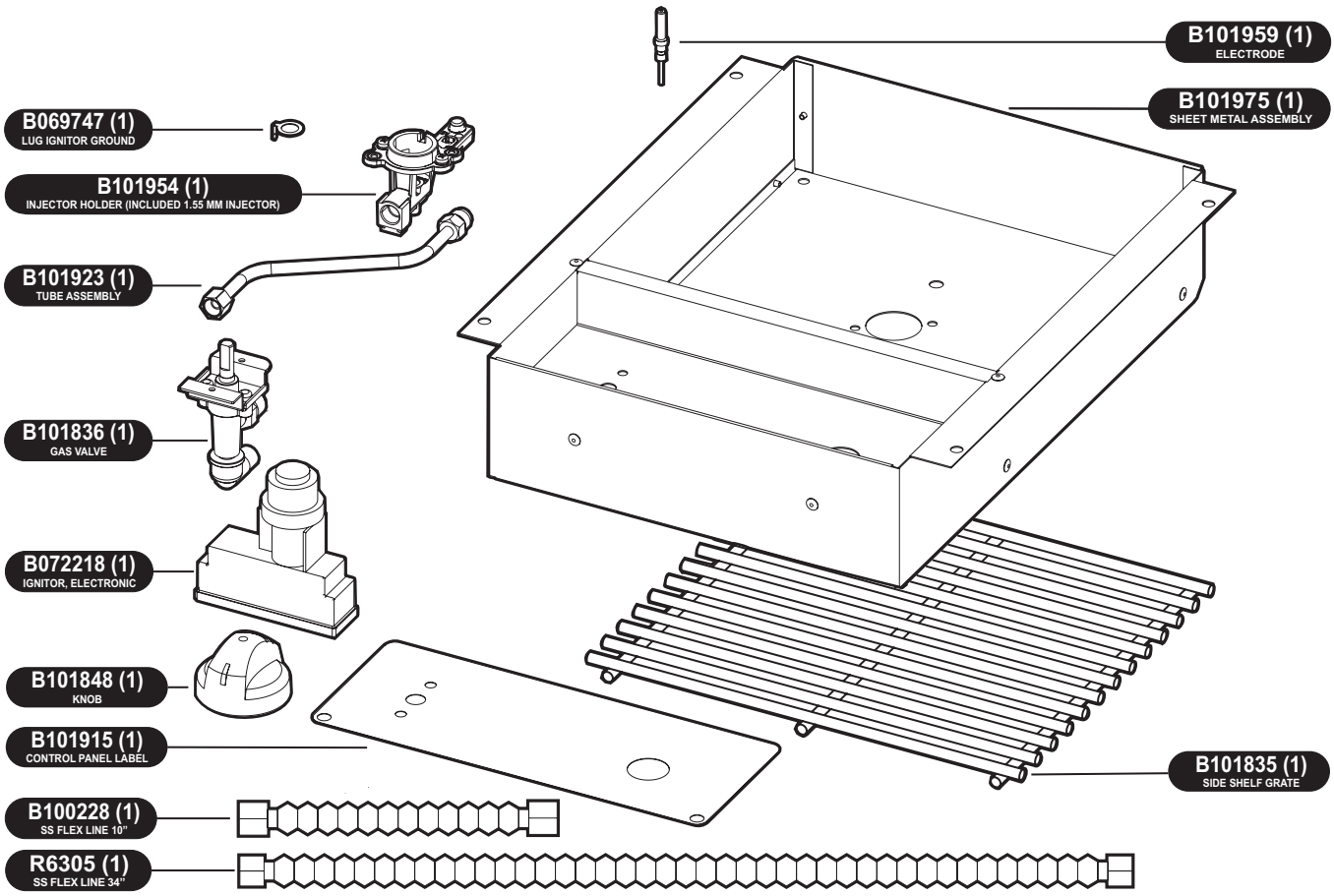

DPA150 HARDWARE PACK - B101982

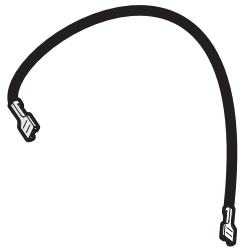

GROUND
WIRE
B072684
(1)

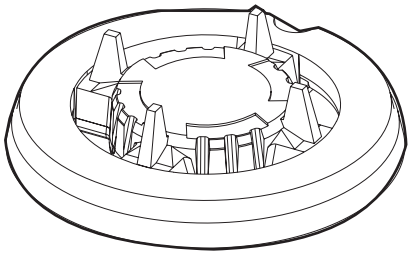

FLAME SPREADER
B101955
(1)

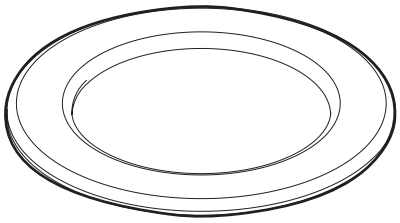

LARGE OUTER CAP
B101956
(1)

BATTERY, AA
B076529
(1)

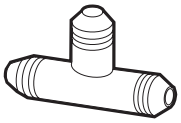

FLARE, MALE 3/8”
“TEE”
B070323
(1)

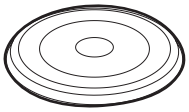

SMALL INNER CAP
B101957
(1)

INJECTOR
1.6MM (NAT)
B101953
(1)

Standard hardware items such as bolts, screws, washers, and nuts can be purchased at your local hardware store. Do not order individual pieces of standard hardware. A replacement hardware pack may be ordered using the hardware pack part number at the top of the page.

DPA150 - INJECTOR (LP)

INJECTOR
1.15MM (LP)
B101974
(1)

CONNECT IGNITOR LEADS

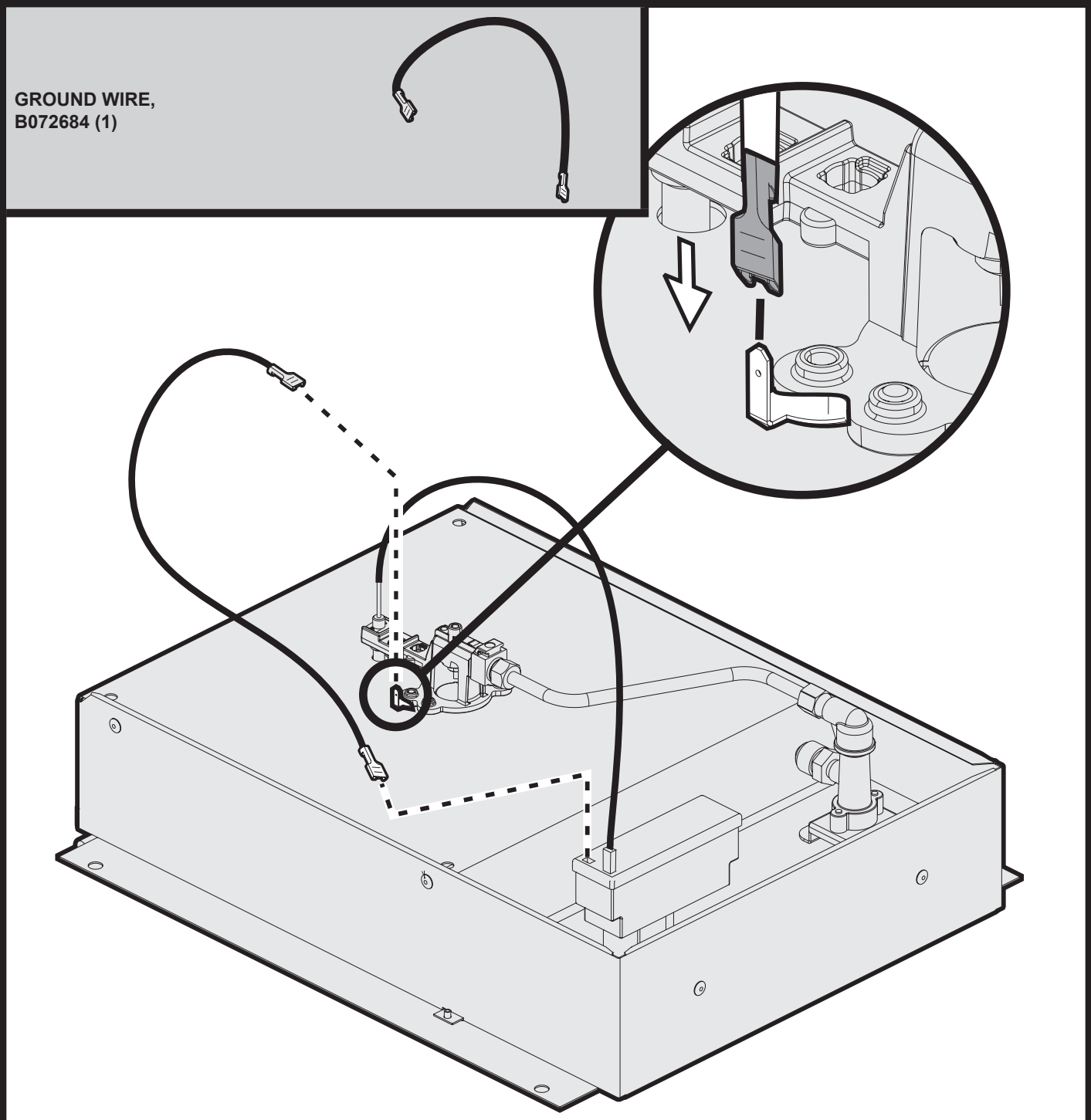

REMOVING LID (IF SHELF IS ALREADY INSTALLED)

SELF-DRILLING PHILLIPS PAN HEAD SCREW, SS, 10-16 X 1/2
R4059 (2)

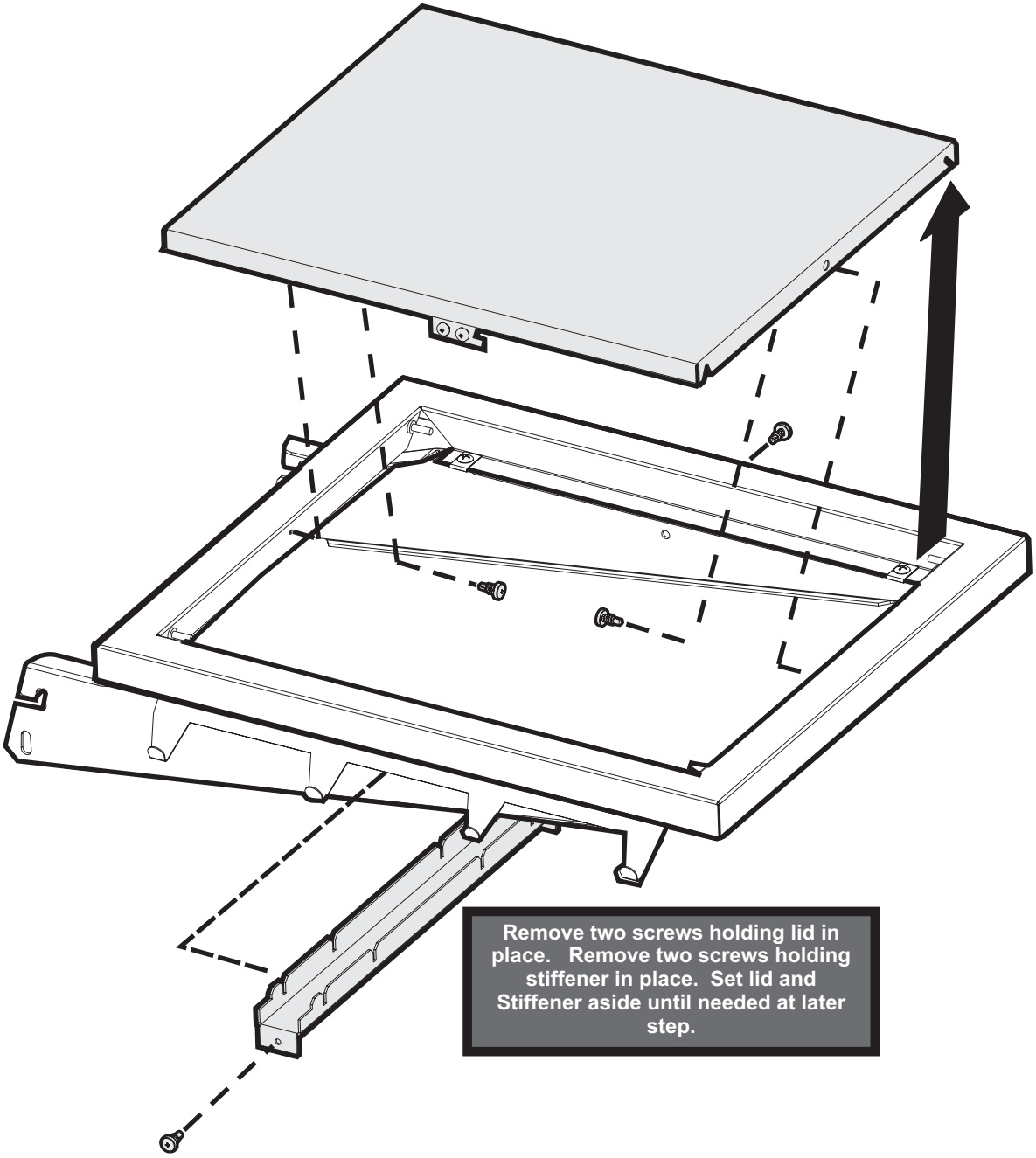

Remove two screws holding lid in place. Remove two screws holding stiffener in place. Set lid and Stiffener aside until needed at later step.

REMOVING FRAMING (IF SHELF IS ALREADY INSTALLED)

PHILLIPS TRUSS HEAD SCREW,
10-24 X 3/4
B076522 (4)

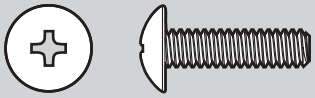

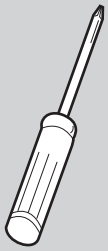

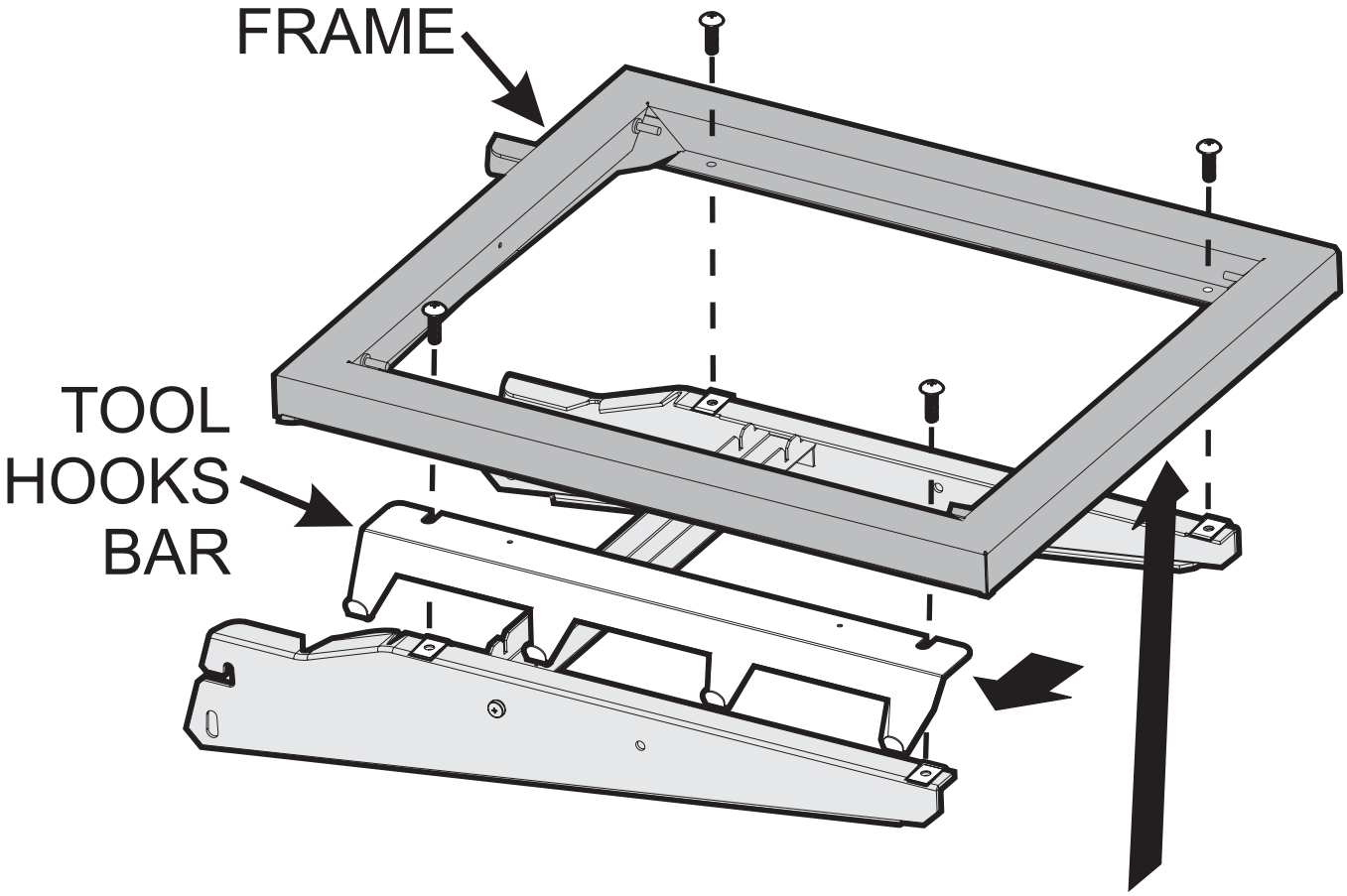

Remove four screws holding frame and tool hooks bar in place. Set frame and tool hooks bar aside until needed at later step.

INSTALL SIDE BURNER TO FRAME

PHILLIPS TRUSS HEAD SCREW,
10-24 X 3/4
B076522 (4)

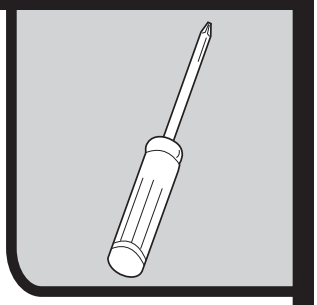

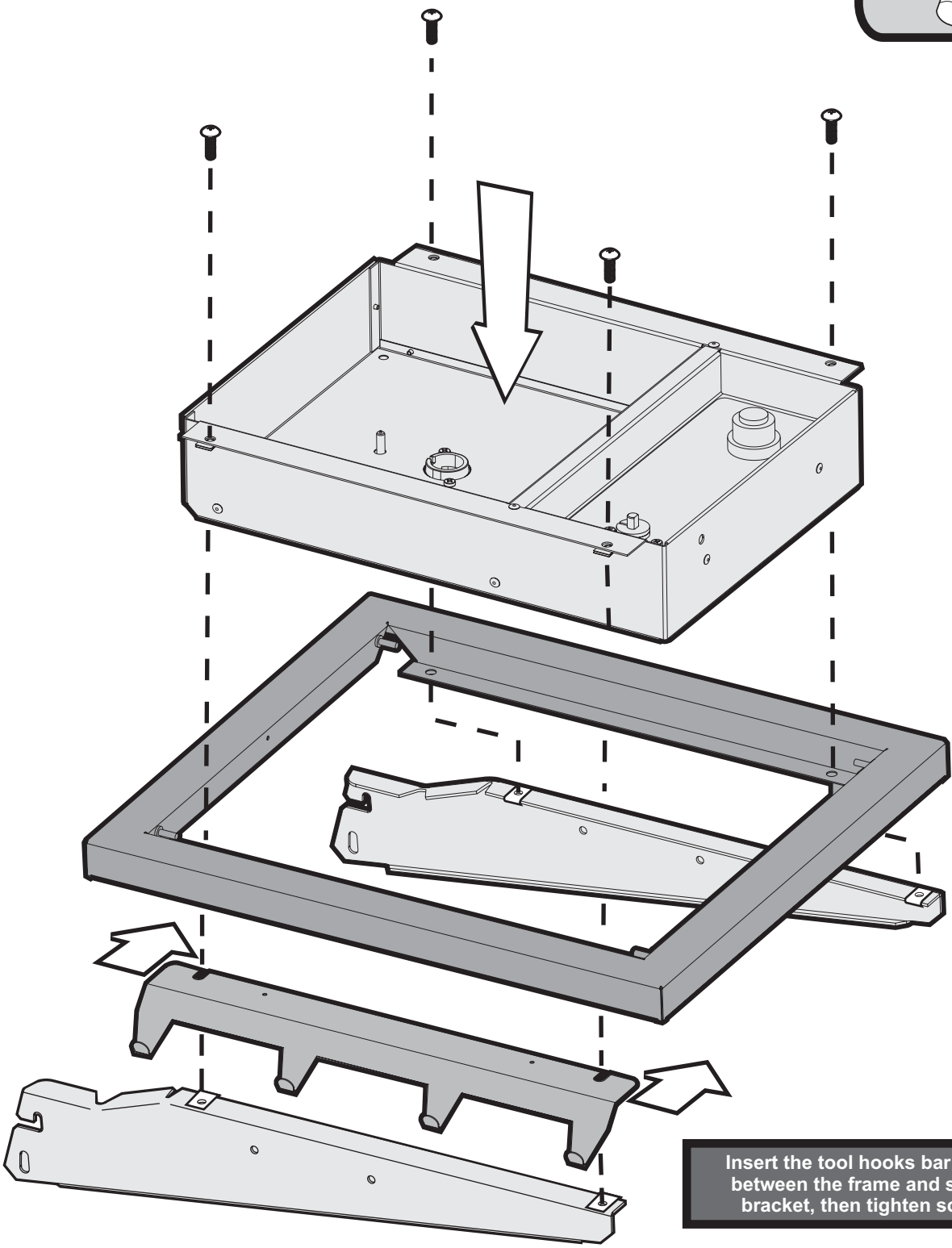

Insert the tool hooks bar in front between the frame and support bracket, then tighten screws.

BATTERY PLACEMENT

BATTERY, AA
B076539 (1)

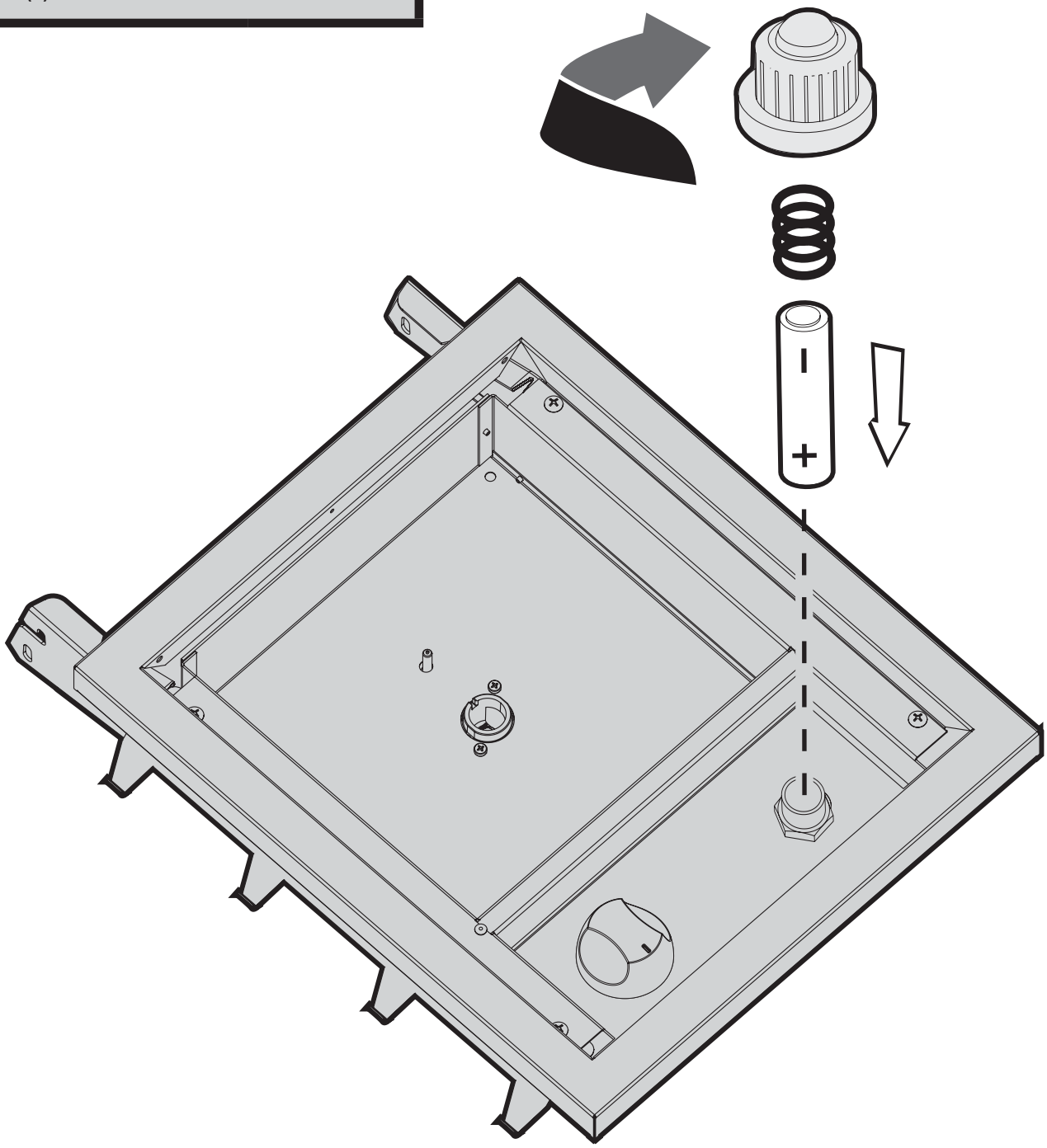

INSTALL SIDE BURNER COMPONENTS

FLAME SPREADER, B101955 (1)

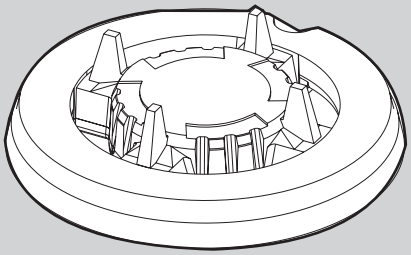

LARGE OUTER CAP, B101956 (1)

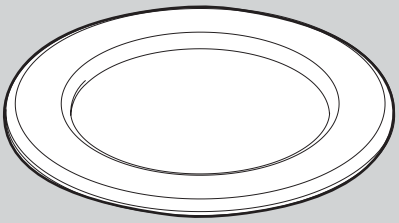

SMALL INNER CAP, B101957 (1)

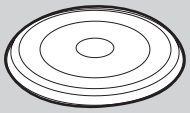

Place the Flame Spreader over the Orifice aligning the Sparker with the cut out in the burner head. Place the two Burner Caps.

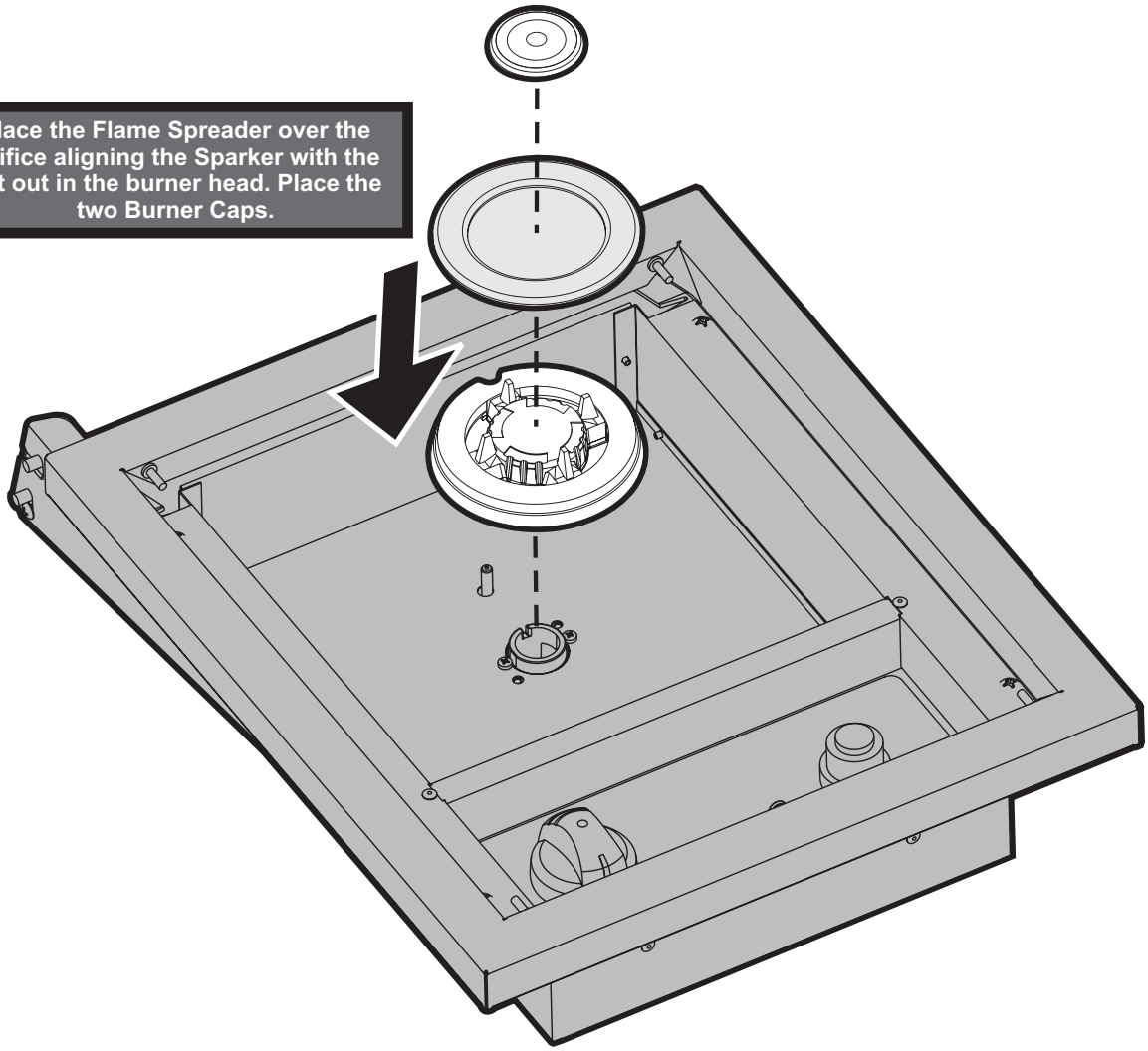

ATTACHING SIDE BURNER TO BRACKET

PHILLIPS PAN
HEAD TYPE F SCREW,
SS, 10-32 X ½
R11387 (2)

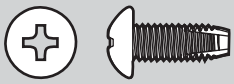

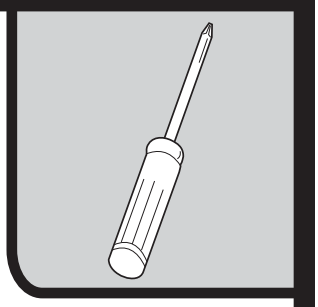

Hang the side Brackets on the lower Pins of the Bracket. Install the two locking screws this will permanently secure the shelf and prevent from lowering.

INSTALL GRATE

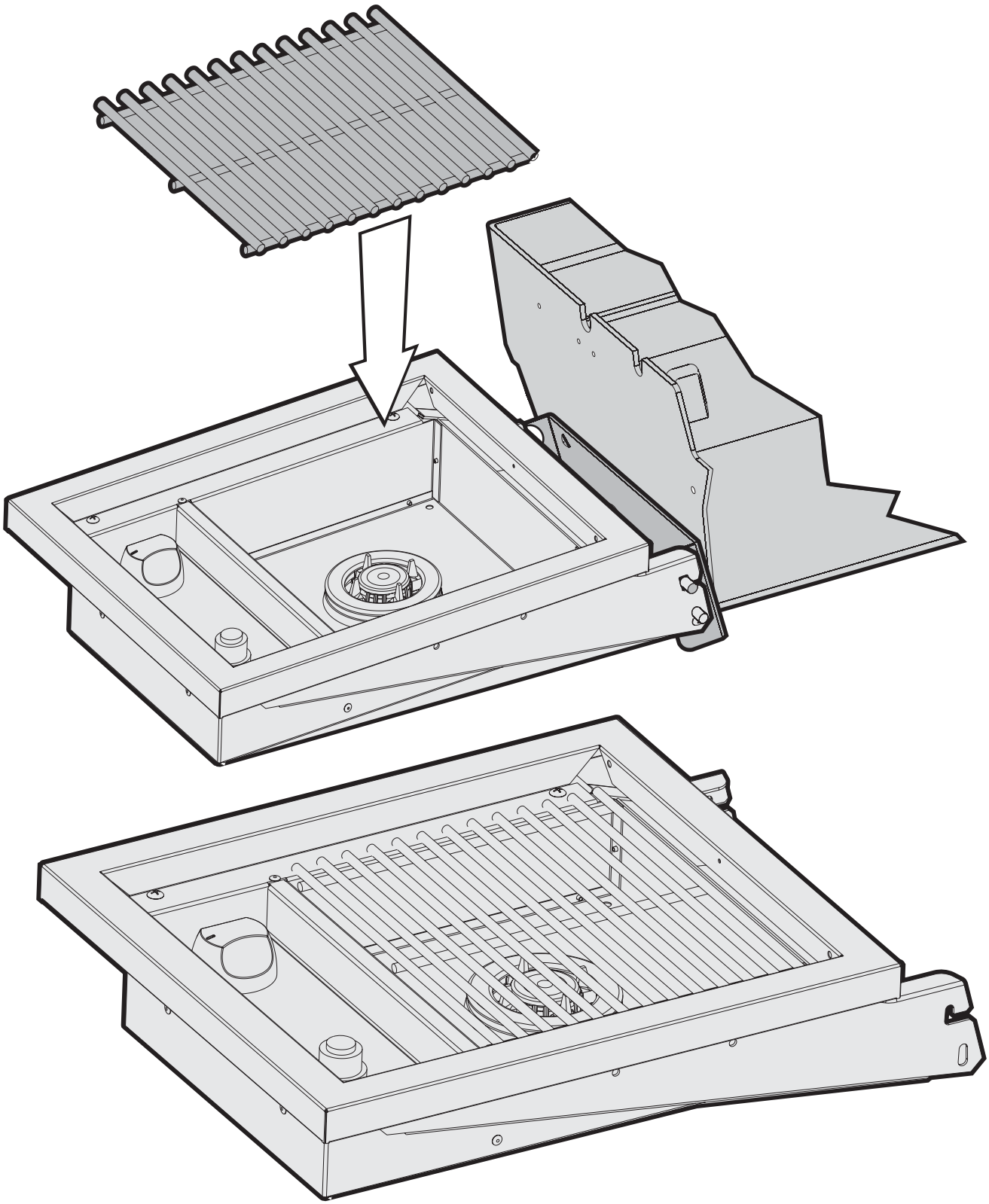

ORIENT LIFTER TAB

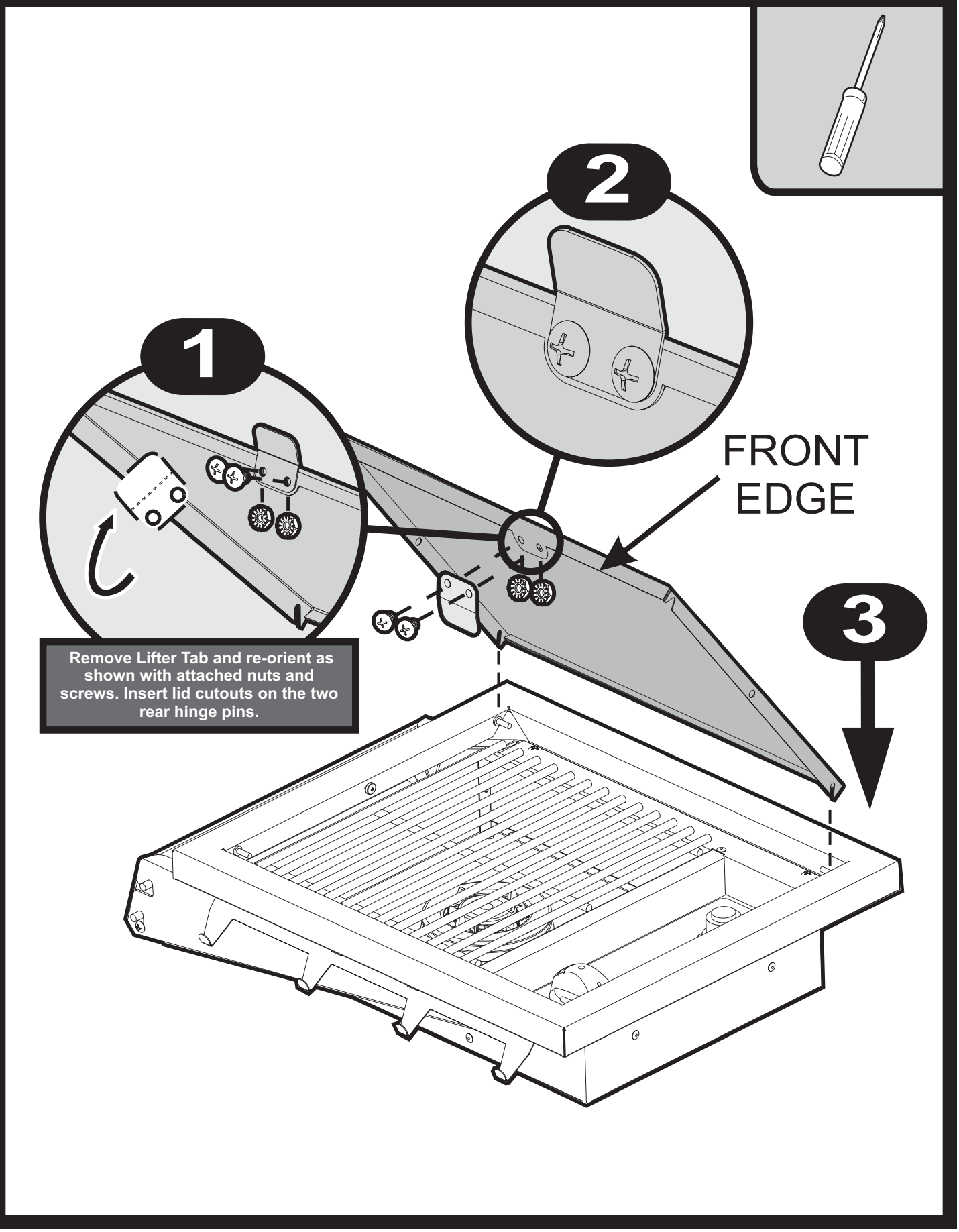

PROPANE GAS CONNECTION

Side Burner Location

This Side Burner is designed for outdoor use only.

This Side Burner only mounts into the DPA153 side shelf on either side of a Broilmaster gas grill and cannot be used with another grill or for any other purpose.

Never operate your Grill and Side Burner in any building, garage, or other enclosed area. Never operate your Grill and Side Burner in a recreational vehicle or boat. Never operate your Grill and Side Burner under any combustible materials, such as carports, covered porches, awnings, or overhangs.

⚠ CAUTION

The installation and operation of this Grill and Side Burner at clearances less than specified below may cause a fire, property damage, or personal injury.

The area surrounding the Grill and Side Burner should be clear to ensure proper ventilation. Do not obstruct the flow of combustion and ventilation air in any way. The ventilation openings on the propane cylinder enclosure must also remain free and clear of debris.

Portable Grills with Side Burners should be level and positioned away from direct wind prior to each use.

Never move a hot grill.

⚠ WARNING

Do not install or operate this Grill and Side Burner where gasoline or other flammable materials are used or stored. Failure to comply with this warning could result in explosion or fire causing property damage or personal injury.

Propane Cylinder Safety

Propane vapor fuels your Grill and Side Burner. Propane is a liquid only when it is highly compressed. Keeping it compressed requires a heavy-duty tank - the LP cylinder.

Inside a full cylinder, the liquid propane makes top up the bottom 80 percent; while propane vapor makes up the 20 percent. As you draw this vapor from the top of the tank, the liquid below expands and turns to vapor. Once all of the liquid turns to vapor, pressure inside the cylinder drops and gas flow stops.

Liquid Propane (LP) gas has a long history of safe use when the safety precautions provided in this manual are followed. **Failure to follow these safety precautions could result in a fire or explosion causing property damage or personal injury.**

Use extreme caution when handling propane gas cylinders.

Keep the cylinder upright while carrying.

While transporting in a vehicle, keep the cylinder upright and secured to prevent movement. Never place a propane gas cylinder in the passenger area of a vehicle.

Replace any cylinder that has been dropped, dented, has a malfunctioning valve, or is visibly damaged. Never attempt to use or repair a damaged propane gas cylinder.

When refilling your cylinder, always insist on a reputable, qualified gas dealer. Your propane gas cylinder is filled by weight, and should never exceed eighty percent (80%) of its weight limit. If the cylinder is not completely empty, the gas dealer must make adjustments to ensure it is not overfilled. Never use an overfilled Propane gas cylinder.

When you finish grilling, turn off the grill's burners and turn off the gas at the cylinder. If the grill will not be used for an extend period, remove the cylinder from the grill for storage.

Cylinder Storage

Store your Grill and Side Burner outdoors in a well-ventilated area when the LP cylinder is attached to it.

Store Propane cylinders in a secured upright position.

Keep children away from LP cylinders.

Store cylinders out of direct sunlight and well away from heat sources. Do not store cylinders in a building, garage, or other enclosed area.

Disconnected cylinders must have a threaded valve plug tightly installed.

Do not store flammable materials near LP cylinders - including gasoline, paper, grill covers, etc.

PROPANE GAS CONNECTION

Propane Cylinder Requirements

Your Broilmaster Side Burner requires a standard 20-lb propane gas cylinder, which is available from your grill dealer, your LP supplier, and at most hardware and home stores.

⚠ CAUTION

Do not use a propane gas cylinder which has a capacity greater than twenty pounds with this grill.

The propane gas cylinder used must be:

1. Constructed and marked in accordance with the specifications for LP gas cylinder of the U.S. Department of Transportation (D.O.T.) or the National Standard of Canada, CAN/CSA-B339, Cylinders, Spheres, and Tubes for Transportation of Dangerous Goods, and Commission as applicable.

2. Provided with a listed overfilling protection device (OPD).

3. Provided with a listed safety device having direct access with the vapor space of the cylinder and the cylinder supply system must be arranged for vapor removal. (Which means the valve assembly is located at top of the LP cylinder and the cylinder must remain upright for the propane to come out of the valve as vapor.)

4. Provided with a shutoff valve terminating in a valve outlet as specified in the Standard for Compressed Gas Cylinder Outlet and Inlet Connections, ANSICGA-V-1.

5. Provided with a plug to effectively seal off the cylinder outlet when the cylinder is being stored or transported.

6. Provided with a collar to protect the cylinder valve.

Connection Requirements

Installation must conform to local codes or, in the absence of local codes, with the National Fuel Gas Code, ANSI Z223.1. In Canada, installation shall be in accordance with CAN/CGA-B149.2 Propane Installation Code, or CAN/CGA-B149.1 Natural Gas Installation Code, and local codes where applicable. Consult your local gas supplier or propane gas dealer for code regulations and recommended procedures.

⚠ CAUTION

Never use Liquid Propane (LP) gas in a grill designed for Natural gas, or use Natural gas in a grill designed for Liquid Propane gas. Questions regarding different types of gases should be directed to your local gas supplier.

⚠ WARNING

Use Propane gas cylinders equipped with an Overfill Protection Device (OPD). An overfilled or improperly filled propane cylinder can cause a fire or explosion.

ATTENTION: Propane gas cylinders must comply with Cylinder Requirements and Connection Requirements above.

Note: Not all valve and cylinder combinations are compatible. Check warning tag on valve and cylinder as well as external fitting threads.

All Broilmaster pressure regulators and hose assemblies require Propane cylinders with a Type 1 connection device as illustrated. **See Figure Below.**

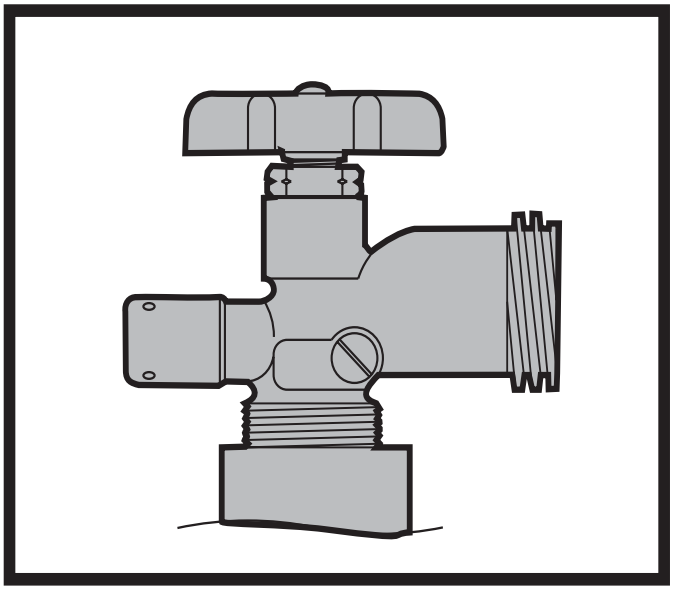

TYPE 1 LP CONNECTION

Inspect the threaded outlet on the tank and the threaded inlet on the grill's pressure regulator for dirt, nicks, or corrosion that might interfere with a gas-tight connection. If the tank outlet shows damage, return the tank to the supplier for a replacement. If the grill's pressure regulator shows nicks or other damage, contact your dealer for genuine Broilmaster replacement parts.

PROPANE GAS CONNECTION

Pressure Regulator and Hose Assembly

The pressure regulator has an outlet pressure of not more than eleven inches water column. It must be connected to the propane gas cylinder's female valve outlet before the Grill and Side Burner can be operated.

⚠ WARNING

Operating a Propane gas grill without the pressure regulator and hose assembly will cause gas leaks which could lead to fire or explosion, resulting in property damage or personal injury.

The pressure regulator's fitting must remain clean and free of nicks and scratches. A dirty, nicked or scratched fitting can cause a gas leak, resulting in an explosion or fire. Use only genuine Broilmaster replacement parts unless otherwise specified by the manufacturer.

Installing "Tee" Connector

If your grill is equipped with a factory installed gas "tee" behind the grill's control panel, please skip to the next section.
Turn OFF the gas valve at the propane cylinder.
Disconnect the regulator and hose assembly from the cylinder.
Disconnect hose from the gas valve located under the grill's control panel.

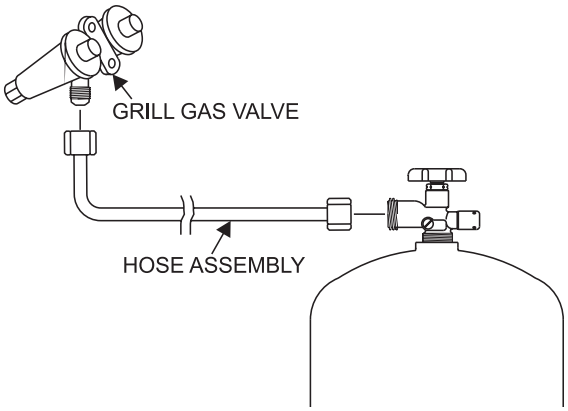

Attach one end of the ten inch stainless steel flex line to the end of the grill's gas valve. Attach the other end of the stainless steel flex line to the brass "tee".
Note: Grills manufactured prior to 1999 may require the alternate "tee" connector.

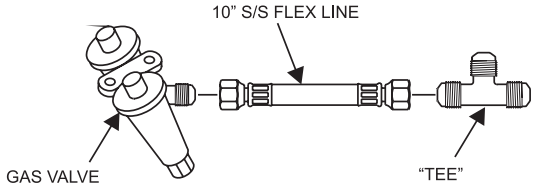

Connecting to Propane Gas

Attach one end of the 34 inch stainless steel flex line to the end of the Side Burner valve. Attach the remaining end of the hose to the "tee" and use two wrenches to tighten the stainless steel flex line connections. One wrench should be used to turn the stainless steel flex line connector while the "tee" or valve is held with the second wrench.

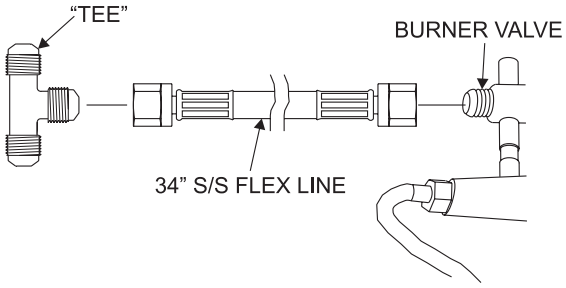

For older Broilmaster grills, this alternate tee fitting kit must be ordered.

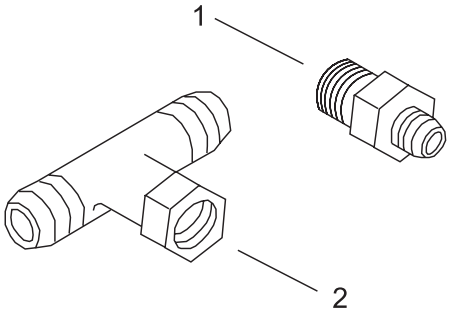

B100156 ALTERNATE TEE FITTING KIT		
Index No.	**Description**	**Part No.**
1	Flared Tube Connector	B100100
2	Alternate Tee Fitting	B070519

PROPANE GAS CONNECTION

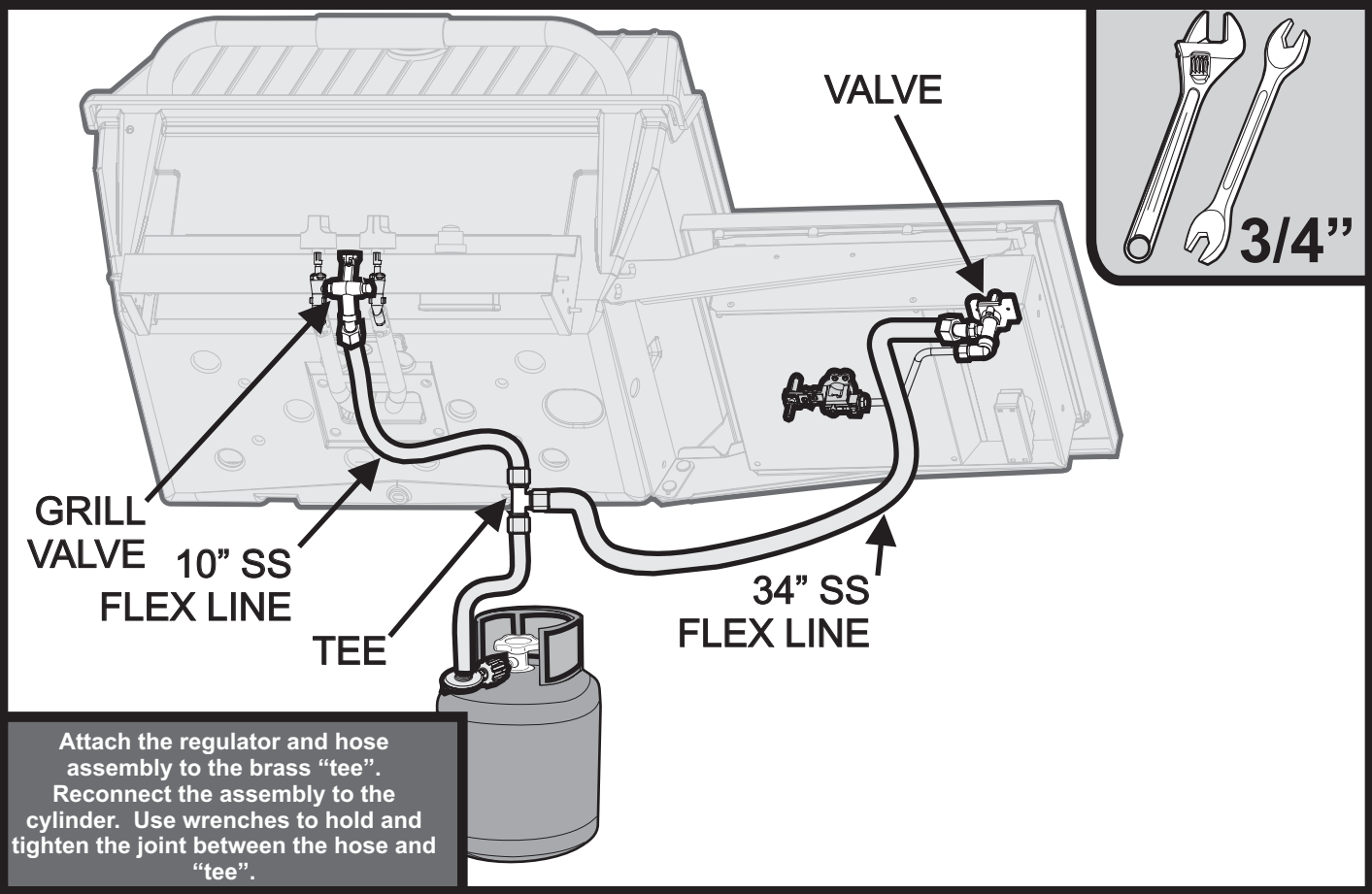

Attach the regulator and hose assembly to the brass “tee”. Reconnect the assembly to the cylinder. Use wrenches to hold and tighten the joint between the hose and “tee”.

NATURAL GAS CONVERSION

Gas Type

Your Broilmaster Side Burner is factory equipped for LP gas and must be converted for use with Natural gas grills. Never use liquid propane gas with a grill designed for natural gas, or natural gas with a grill designed for liquid propane gas. The type gas required for your grill can be determined from its product identification label. Questions regarding different types of gases should be directed to your gas company.

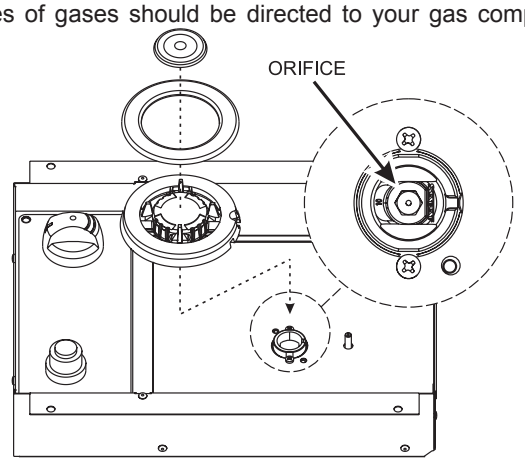

1. Remove burner caps.
2. Remove flame spreader.
3. Use a 7 mm nut driver or socket wrench to remove the 1.15mm LP orifice and replace it with the 1.6mm Natural gas orifice supplied (sizes are stamped on each orifice).
4. Replace the flame spreader and caps.
5. Remove plastic knob on the control valve by inserting small phillips screwdriver through hole at base of knob. Loosen set screw by turning counter-clockwise. Remove knob from control valve. The control valve will have a set screw in the center of stem. Using a small standard screwdriver turn set screw in center of valve stem half turn counterclockwise.

VALVE CONVERSION

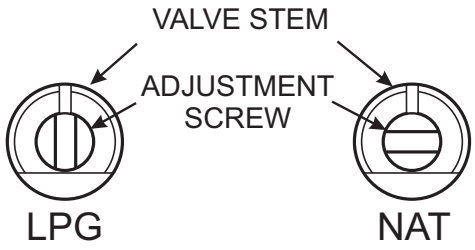

6. Apply soapy solution to test for leaks around the set screw. If a leak is found, turn screw clockwise until bubbles cease.

Important: Place conversion label adjacent to serial number label under Side Burner.

NATURAL GAS CONNECTION

Side Burner Location

This Side Burner is designed for outdoor use only.

This Side Burner only mounts into the DPA153 side shelf on either side of a Broilmaster gas Grill and cannot be used with another grill or for any other purpose.

Never operate your Grill and Side Burner in any building, garage, or other enclosed area. Never operate your grill in a recreational vehicle or boat. Never operate your Grill and Side Burner under any combustible materials, such as carports, covered porches, awnings, or overhangs.

⚠ WARNING

The installation and operation of this Grill and Side Burner at clearances less than specified below may cause a fire, property damage, or personal injury.
A minimum clearance of sixteen inches is required from all sides of the Side Burner to any combustible material. Refer to the grill's Owner's Manual for specific grill clearances.

Keep the area around the grill clear to ensure proper ventilation.

Portable Grills with Side Burners should be level and positioned away from direct wind prior to each use.

⚠ WARNING

Do not install or operate this Grill and Side Burner where gasoline or other flammable materials are used or stored. Failure to comply with this warning could result in explosion or fire causing property damage or personal injury.

Connection Requirements

⚠ CAUTION

The grill and its individual shutoff valve must be disconnected from the gas supply piping system during any system pressure testing at test pressures in excess of 1/2 PSIG.

⚠ CAUTION

Never use Liquid Propane (LP) gas in a grill designed for Natural gas, or Natural gas in a grill designed for Liquid Propane gas. Questions regarding different types of gases should be directed to your local gas company.

Installation must conform to local codes or, in the absence of local codes, with the National Fuel Gas Code, ANSI Z223.1. In Canada, installation shall be in accordance with CAN/CGA-B149.2 Propane Installation Code, or CAN/CGA-B149.1 Natural Gas Installation Code, and local codes where applicable. Contact your local gas company for code regulations, recommended procedures, and the installation of your grill's gas supply line.

Broilmaster gas grills and Side Burners are not equipped with pressure regulators. Your gas grill operates at a manifold pressure of seven inches water column.

Connect cart mounted natural gas grills to a pre-installed gas supply line using the twelve foot flexible hose and quick disconnect kit supplied or specified by the manufacturer.

NATURAL GAS CONNECTION

Connection Instructions

The grill's natural gas supply line valve installed by your gas company must be turned to OFF.

Important: The gas supply line must have a shutoff valve inside the wall. Contact your local gas company for directions.

Disconnect the gas supply line from the gas valve located under the grill's control panel.

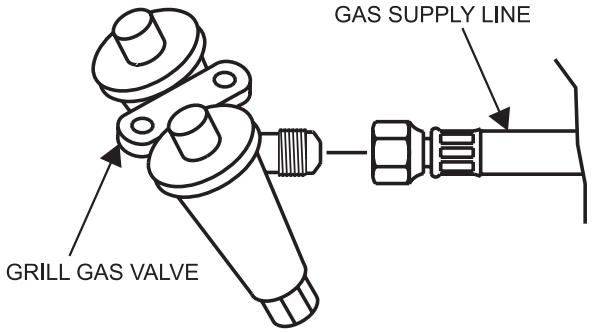

Attach one end of the 10 inch stainless steel flex line to the end of the grill's gas valve.

Attach the other end of the stainless steel flex line to the brass "tee".

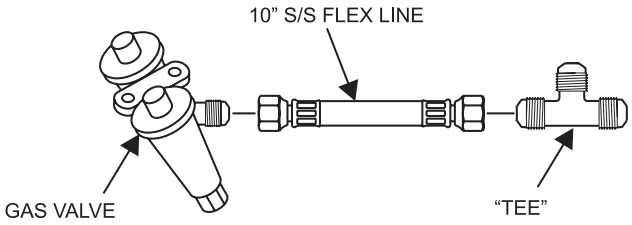

Attach one end of the 34 inch stainless steel flex line to the end of the Side Burner valve.

Attach the remaining end of the stainless steel flex line to the end of the "tee" connector.

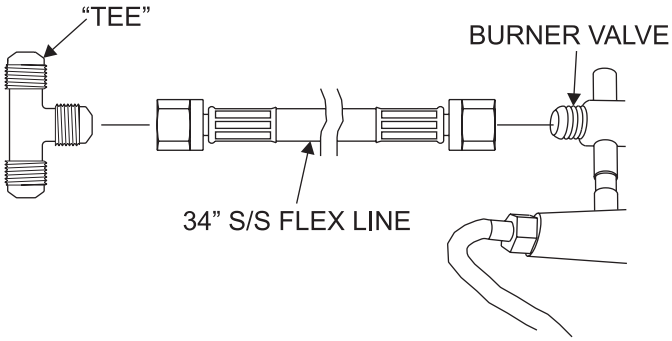

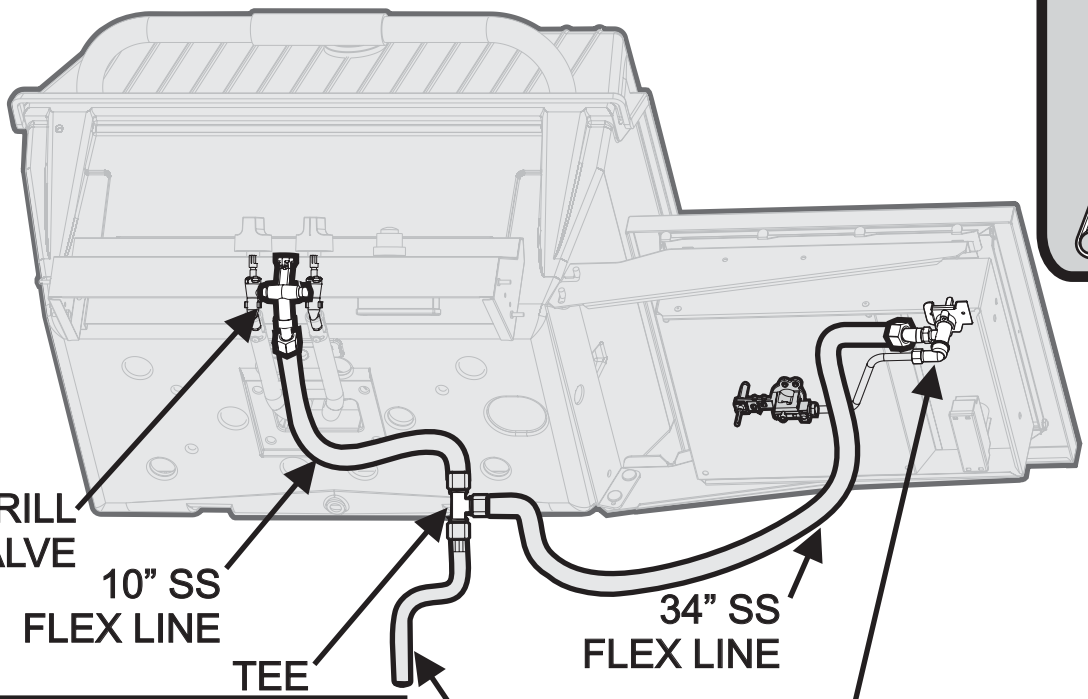

Attach the gas supply line to the brass "tee". Use two wrenches to tighten the joint. Replace cover plate and the two screws removed earlier. Remove two screws holding the cover plate to access the valve connections.

COMPLETED ASSEMBLY

Thank you for purchasing a Broilmaster Side Burner and we hope you enjoy years of great meals prepared on your Broilmaster. Please feel free to visit the Broilmaster Facebook page and share photos of your Broilmaster grill.

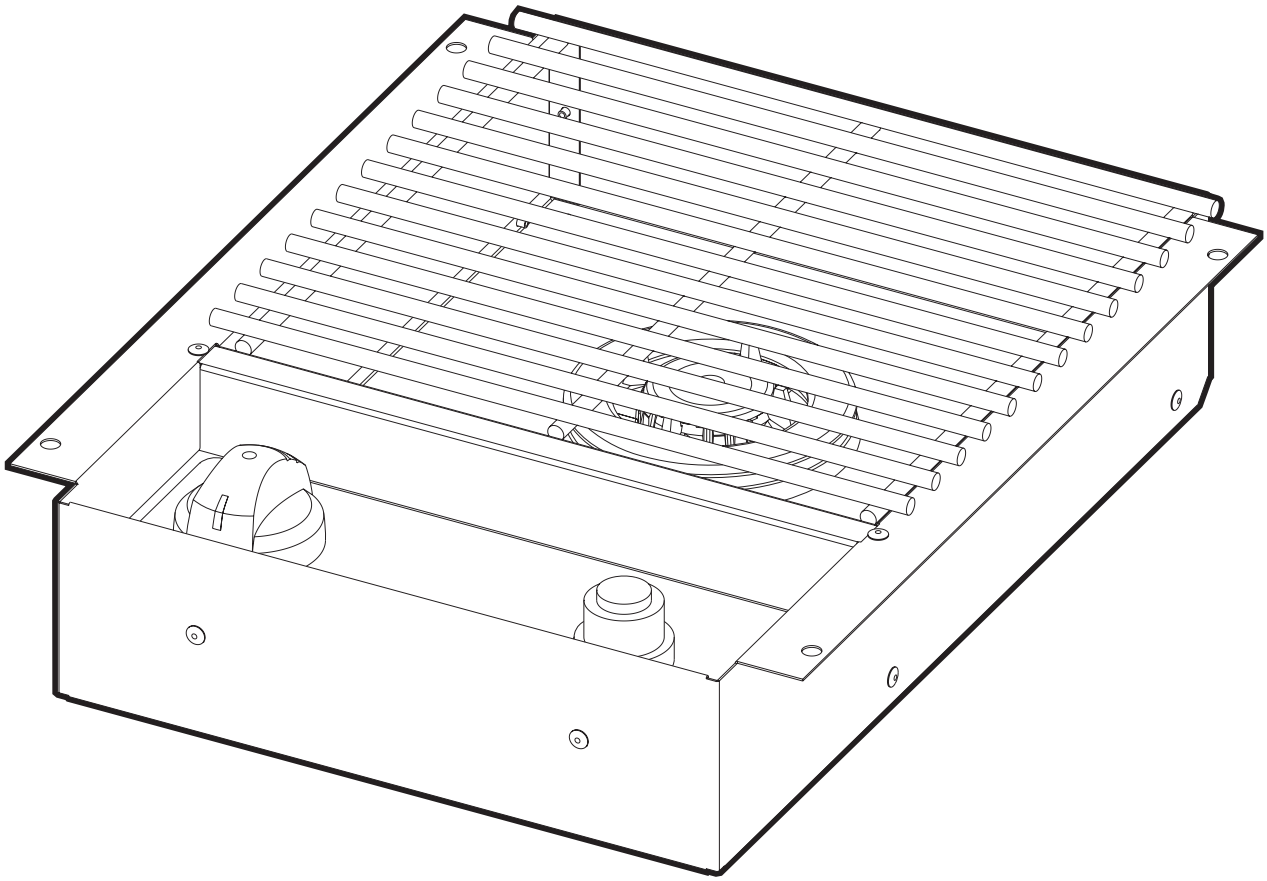

Thank You!

Check for Gas Leaks

Check for gas leaks each time you connect your Broilmaster gas Grill and Side Burner to a propane gas cylinder, when a connected cylinder has not been used recently, or when the Grill and Side Burner are initially used.

⚠ WARNING

Do not use an open flame to check for leaks. Checking for leaks with an open flame may lead to a fire or explosion, resulting in property damage or personal injury.

To check for gas leaks:

1. Use water dish and a little dish washing liquid to make a soapy solution.
2. Turn OFF the knob on both the Grill and Side Burner's control panel.
3. Turn ON the gas at the supply. *A hissing sound indicates a leak.* Turn OFF the gas and repair all leaks.
4. If no hissing occurs, apply the soapy solution to all gas connections.
5. Look for bubbles. *Bubbles indicate a leak.*
6. If there are bubbles, turn OFF the gas and repair all leaks.
7. Turn the gas ON and repeat the above procedure until all leaks are repaired.

Operating Instructions

Lighting with the Electric Ignitor

⚠ CAUTION

If a burner fails to light after 5 seconds, turn the burner OFF for 5 minutes, to allow the gas to clear, then try again.

1. Open the Side Burner lid.
2. Push and turn the burner control knob counterclockwise to HI.
3. Push and hold ignitor button until burner lights. (Approximately five seconds).

Lighting with a Match

⚠ CAUTION

If a burner fails to light after 5 seconds, turn the burner OFF for 5 minutes, to allow the gas to clear, then try again.

1. Open the Side Burner lid.
2. Light and place a long wooden match next to the burner ports under the cooking grid.
3. Push and turn the burner control knob counterclockwise to HI.

Before Cooking

Before cooking on a grill for the first time, burn off any oil residue from the manufacturing process.

1. Open the grill lid.
2. Light grill burner.
3. Burn on HI for ten minutes.
4. Close the lid and burn on HI for an additional ten minutes.
5. The grill is now ready for use.

Preheating

Before cooking on a gas grill, allow the grill to preheat on HI for 5 minutes with the lid closed.
Preheating uses very little fuel, provides better flavor, and provides more consistent cooking times.

Electrical Accessories

Any electrical accessory (e.g. rotisserie) used on your grill must be electrically grounded in accordance with local codes or, in the absence of local codes, with the National Electric Code, ANSI/NFPA 70. In Canada, the electrical accessory must be electrically grounded in accordance with the applicable section of the current Canadian Electrical Code, CSA C22.1.

Any electrical accessory should be equipped with a three-prong (grounding) plug and plugged into a properly grounded three-prong receptacle or wall outlet. Do not cut or remove the grounding prong from the plug.

If an extension cord is required, use only a three-prong cord and plug into a properly grounded receptacle as described above. Do not expose an electrical accessory to water. Avoid using any electrical accessory in wet weather as it may present a shock hazard.

Keep any electrical cord and fuel supply hose away from all heated surfaces.

Cleaning the Grill

⚠ CAUTION

To prevent injury, do not clean Side Burner while hot.

Buy a good grill brush. Inexpensive grill brushes tend to lose their metal bristles, which can stick to your cooking grids and become embedded in foods.

Note: Do not use a commercial cleaner on the cooking grid. For baked on residue use grill brush on the cooking grid and other components.

IMPORTANT SAFETY INFORMATION

⚠ WARNING

Spiders and insects can nest in gas grill burners causing the gas ignite under the control panel. This is very dangerous and can damage the grill, making it unsafe to operate. Inspect the grill at least twice per year and more often when spiders are active.

Be sure all grill controls are turned off and the grill is cool before using any type of aerosol cleaner on or around the grill. Some chemicals, in the presence of heat, may ignite or cause metal parts to corrode. Do not operate the grill under unprotected combustible construction. Use only in well ventilated areas. Do not use in buildings, garages, sheds, breezeways or any enclosed areas.

Keep the area around the grill free from combustible materials, trash, or volatile fluids and vapors such as gasoline or charcoal lighter fluid. Do not obstruct the flow of combustion and ventilation air. Keep the back of the cart free from debris.

If the grill is stored indoors ensure that it is cool. Remove the propane cylinder and store it outside in a well-ventilated area, out of reach of children.

Never use the grill in windy conditions. If located in a consistently windy area (oceanfront, mountain top, etc.) a windbreak will be required.

Always adhere to the specified clearance.

Keep electrical cords always from the heated areas of the grill.

Do not use the grill for cooking excessively fatty meats or products, which promote flare-ups.

Keep Children Away from the Grill at All Times

Never leave children unattended near the grill. Teach them to stay away even when you are not cooking, as the grill can remain hot after it is turned off.

Never allow children near the grill at any time. Do not store items of interest to children around or below the grill or in the cart.

Never allow children to crawl inside of a cart or island enclosure.

IMPORTANT SAFETY INFORMATION

Practice Safe Grilling

Do not wear loose fitting clothing or flammable clothing (such as synthetics) around the grill. Never let clothing, pot holders, or other flammable materials come in contact with or too close to any grate, burner or hot surface. Fabric may ignite and result in personal injury.

Use only dry pot holders. Using a damp pot holder on a hot surface may cause burns from steam. Do not use towels or bulky cloth in place of pot holders. Do not let pot holders touch hot cooking grids. Never use a sponge on a hot surface, as it may cause steam burns.
Protect your hand with an oven mitt or pot holder when opening the grill lid. Never lean over an open grill.

Use heat-proof cookware and tools specifically designed for grilling. Other types of material may shatter with sudden temperature changes or melt from extreme heat. Use tools with insulated handles and keep them away from the grill to avoid heat build-up.

Do not spray aerosol oil or butter or pour liquid oil into the grill. Doing so will cause a flash fire that can burn you.

Grease is flammable. Let grease cool before attempting to handle it. Avoid letting grease deposits collect in the bottom of the grill. Clean your grill often.

Do not use aluminum foil to line the cooking grids or grill bottom. This can disrupt combustion air flow or trap excess heat in the control area. Excess heat can melt knobs or ignitors, and increase the chance of personal injury. The drip tray accessory may be lined with aluminum foil.

Do not heat unopened food containers - such as cans, jars, and sealed pans. Pressure build-up may cause the container to burst.

When lighting a grill, always open the lid first and pay close attention to what you are doing. Turn one burner knob to HI, press the ignitor button and count to five.

For proper lighting and performance of the burners keep the ports clean.

Clean the grill with caution. Avoid steam burns; do not use a wet sponge or cloth to clean the grill while it is hot. Some cleaners produce noxious fumes or can ignite if applied to a hot surface.

Cook Food To Proper Temperatures

Cooking food safely requires that you raise the internal temperature of the meat high enough and for a long enough period of time to kill any food-borne bacteria that may cause illnesses.

Color is not the best indicator that food is safe to eat. Use a high-quality probe thermometer to be sure your food is properly cooked. Place the tip of an instant-read thermometer into the center of the thickest part of the food but at least 1/2 inch deep. Read the temperature after about 10 seconds. Follow the temperature guidelines for the type of food you're cooking.

The following guidelines are from the U.S. Food and Drug Administration Center for Food Safety and Applied Nutrition.

Cook to Internal Temp			
Meat & Poultry	**Medium Rare**	**Medium**	**Well Done**
Fresh Beef - Medium Rare	145°F	160°F	170°F
Ground turkey, chicken	165°F		
Ground veal, beef, lamb, pork	145°F with 3 minutes of rest and then turn		
Fresh Pork - Medium		160°F	170°F
Chicken - whole	165°F		
Turkey - whole	165°F		
Poultry breasts, roast	165°F		
Poultry thighs, wings	165°F		
Stuffing (cooked alone or in bird)	165°F		
Duck and goose	180°F		
Fresh Veal - Medium Rare	160°F		
Fresh Lamb - Medium Rare	145°F	160°F	170°F
Ham - fresh (raw)	145°F	160°F	170°F
Ham - pre-cooked (reheat)	140°F		
Seafood			
Fish	Cook until flesh turns opaque and flakes easily with a fork.		
Shrimp, lobster, crab	Cook until shells turn red and flesh becomes pearly opaque.		
Scallops	Should turn milky white or opaque and firm.		
Clams, mussels, oysters	Cook until shells open.		

*The above temperature settings are a guide, the temperatures may vary due to wind and outside ambient temperatures.

WARRANTY TERMS

Empire Comfort Systems Inc. warranties this Broilmaster premium gas grill to be free from defects at the time of purchase and for the periods specified below. Broilmaster Premium Gas Grills must be installed by a qualified technician and must be maintained and operated safely, in accordance with the instructions in the owner's manual. This warranty applies to the original purchaser only and is not transferable. All warranty repairs must be accomplished by a qualified gas appliance technician.

Limited Lifetime Parts Warranty – Against Rust-Through

If the items listed below fail because of defective workmanship or material, Empire will repair or replace at Empire's option. The limited lifetime warranty provides one-time replacement of a covered component.

- Aluminum Grill Housing (except paint)
- Stainless Steel Cooking Grids and Stainless Steel Griddles
- Select Stainless Steel Components – Cart, Mounting, Bowtie Burner, Side Burner (DPSBSS), Side Burner Housing, and Warming Rack
- Stainless Steel Built-In Components – Built-In Kits for 3-Series Grill Heads, Door Kit, Tilt-Out LP Tank Door, and Vent Register Kit

Limited Ten-Year Parts Warranty – Against Rust-Through

If the items listed below fail because of defective workmanship or material, Empire will repair or replace at Empire's option.

- Stainless Steel Burners H-Series, Q-Series and R3B
- Stainless Steel Drip Pan for Q-Series
- Side Burner (DPASBC), Side Burner Housing (BSA)

Limited Five-Year Parts Warranty – Against Rust-Through

If the items listed below fail because of defective workmanship or material, Empire will repair or replace at Empire's option.

- Infrared Burners on R3 or R3B
- Flare Buster™ Ceramic Flavor Enhancers
- Painted Electro-Galvanized Steel Components
- Stainless Steel Smoker Shutter

Limited Two-Year Parts Warranty – Against Rust-Through

If the items listed below fail because of defective workmanship or material, Empire will repair or replace at Empire's option.

- Porcelain Coated Steel Briquette Racks
- Chrome-Plated Warming Rack
- Stainless Steel Heat Shield

Limited One-Year Parts Warranty

If the items listed below fail because of defective workmanship or material, Empire will repair or replace at Empire's option.

- Valves, knobs, ignitors, labels, hoses, fittings, grease cups, drip buckets, and all other parts and accessories – including those made from stainless steel – unless specified above
- Paint on Aluminum Grill Head

Duties Of The Owner

The appliance must be installed by a qualified installer and operated in accordance with the instructions furnished with the appliance.
A bill of sale, cancelled check, or payment record should be kept to verify purchase date and establish warranty period.
Ready access to the appliance for service.

What Is Not Covered

Damages that might result from the use, misuse, or improper installation or storage of this appliance.
Travel, diagnostic costs and freight charges on warranted parts to and from the factory.
Claims that do not involve defective workmanship or materials.
Unauthorized service or parts replacements.
Removal and reinstallation cost.
Inoperable due to improper or lack of maintenance.
The costs of a service call to diagnose a problem and labor for replacement or repairs.

How To Get Service

To make a claim under this warranty, please have your receipt available and contact your installing dealer. Provide the dealer with the model number, serial number, type of gas, and purchase verification. The installing dealer is responsible for providing service and will contact the factory to initiate any warranted parts replacements. Empire will make replace replacement parts available at the factory. Shipping expenses are not covered. If, after contacting your Empire dealer, service received has not been satisfactory,

Contact: Consumer Relations Department
Replacement, Empire Comfort Systems Inc.,
PO Box 529, Belleville, Illinois 62222, or send an e-mail to
info@empirecomfort.com with "Consumer Relations" in the subject line.

Your Rights Under State Law

This warranty gives your specific legal rights, and you may also have other rights, which vary from state to state.

Broilmaster is a Division of Empire Comfort Systems, Inc.

MASTER PARTS DISTRIBUTOR LIST

To order parts under warranty, please contact your local Broilmaster dealer. See the dealer locator at www.broilmaster.com.

To provide warranty service, your dealer will need your name and address, purchase date and serial number, and the nature of the problem. Please keep your receipt to establish ownership and date of purchase.

To order parts after the warranty period, please contact your dealer or one of the Master Parts Distributors listed below.

The Master Parts Distributor list changes from time to time. For the current list go to www.broilmaster.com and click on the Parts button.

Note: Master Parts Distributors are independent businesses that stock the most commonly ordered repair parts.

Dey Distributing
1401 Willow Lake Boulevard
Vadnais Heights, MN 55101

Phone: 651-490-9191
Toll Free: 800-397-1339
Website: www.deydistributing.com
Parts: Heater, Hearth and Grills

Victor Division of F. W. Webb Company
200 Locust Street
Hartford, CT 06114

Phone: 860-722-2433
Toll Free: 800-243-9360
Fax: 860-293-0479
Toll Free Fax: 800-274-2004
Websites: www.fwwebb.com & www.victormfg.com
Parts: Heater, Hearth and Grills

East Coast Energy Products
10 East Route 36
West Long Branch, NJ 07764

Phone: 732-870-8809
Toll Free: 800-755-8809
Fax: 732-870-8811
Website: www.eastcoastenergy.com
Parts: Heater, Hearth and Grills

Able Distributors
2501 North Central Avenue
Chicago, IL 60639

Phone: 773-889-5555
Toll Free: 800-880-2253
Fax: 773-466-1118
Website: www.abledistributors.com
Parts: Heater

HOW TO ORDER REPAIR PARTS

Parts Not Under Warranty

Parts can be ordered through your Service Person, Dealer, or a Master Parts Distributor. See this page for the Master Parts Distributors list. For best results, the **service person or dealer** should order parts through the distributor. Parts can be shipped directly to the **service person/dealer**.

Warranty Parts

Warranty parts will need a proof of purchase and can be ordered by your Service Person or Dealer. Proof of purchase is **required** for warranty parts.

All parts listed in the Parts List have a Part Number. When ordering parts, first obtain the Model Number and Serial Number from the name plate on your equipment. Then determine the Part Number (**not** the Index Number) and the Description of each part from the following illustration and part list. Be sure to give all this information . . .

Model Number / Dealer_____ Part Description _____

Serial Number / Dealer Phone Number_____ Part Number _____

Type of Gas (Propane or Natural) _____

Do not order bolts, screws, washers or nuts. They are standard hardware items and can be purchased at any local hardware store.

Shipments contingent upon strikes, fires and all causes beyond our control.

Your Broilmaster Premium Gas Grill is identified by model number, serial number, and gas type. This information is provided on a product identification label located on the grill's control panel. For your convenience, complete this section for future reference when contacting your dealer.

GRILL MAINTENANCE HISTORY

Date	Maintenance Performed

BROILMASTER
A Division of Empire Comfort Systems, Inc.
918 Freeburg Ave.
Belleville, Illinois 62220
Visit our web site at www.broilmaster.com
If you have a general question about our products, please e-mail us at info@empirecomfort.com.
If you have a service or repair question, please contact your dealer.